UNITED STATES OF AMERICA
DEPARTMENT OF TRANSPORTATION—FEDERAL AVIATION ADMINISTRATION

STANDARD AIRWORTHINESS CERTIFICATE

1. NATIONALITY AND REGISTRATION MARKS	2. MANUFACTURER AND MODEL	3. AIRCRAFT SERIAL NUMBER	4. CATEGORY
N8865A	BEECHCRAFT B35	D-2520	NORMAL

5. AUTHORITY AND BASIS FOR ISSUANCE

This airworthiness certificate is issued pursuant to the Federal Aviation Act of 1958 and certifies that, as of the date of issuance, the aircraft to which issued has been inspected and found to conform to the type certificate therefor, to be in condition for safe operation, and has been shown to meet the requirements of the applicable comprehensive and detailed airworthiness code as provided by Annex 8 to the Convention on International Civil Aviation, except as noted herein.
Exceptions:

NONE

6. TERMS AND CONDITIONS

Unless sooner surrendered, suspended, revoked, or a termination date is otherwise established by the Administrator, this airworthiness certificate is effective as long as the maintenance, preventative maintenance, and alterations are performed in accordance with Parts 21, 43, and 91 of the Federal Aviation Regulations, as appropriate, and the aircraft is registered in the United States.

DATE OF ISSUANCE	FAA REPRESENTATIVE	DESIGNATION NUMBER
11/27/56R	GARY A. VIDAK	ASO-FSDO-15

Any alteration, reproduction, or misuse of this certificate may be punishable by a fine not exceeding $1,000, or imprisonment not exceeding 3 years, or both. THIS CERTIFICATE MUST BE DISPLAYED IN THE AIRCRAFT IN ACCORDANCE WITH APPLICABLE FEDERAL AVIATION REGULATIONS.

UNITED STATES OF AMERICA
DEPARTMENT OF COMMERCE—CIVIL AERONAUTICS ADMINISTRATION

CERTIFICATE OF AIRWORTHINESS

1. NATIONALITY AND REGISTRATION MARKS	2. AIRCRAFT AIRWORTHINESS CLASSIFICATION
N8865A	STANDARD

3. This Certificate of Airworthiness is issued pursuant to the Civil Aeronautics Act of 1938 as amended. The aircraft identified hereon is considered airworthy when maintained and operated in accordance with the Civil Air Regulations and applicable aircraft Operation Limitations.

4. UNLESS SOONER SURRENDERED, SUSPENDED, REVOKED, OR A TERMINATION DATE IS OTHERWISE ESTABLISHED BY THE CIVIL AERONAUTICS BOARD THIS CERTIFICATE WILL ~~EXPIRE~~ REMAIN IN EFFECT AS LONG AS THE AIRCRAFT IS MAINTAINED IN ACCORDANCE WITH PART 43.

5. DATE OF ISSUANCE OR RENEWAL	6. CAA REPRESENTATIVE	7. DESIGNATION NO.
11/27/56	Henry J. Smith HENRY J. SMITH	1-9

8. *Any alteration or misuse of this Certificate is punishable by a fine of not exceeding $1,000 or imprisonment not exceeding 3 years, or both.*

Form ACA-1862 (12-50)

GPO 16—63778-1

D-
PLEZ CALL CHARLIE AUSTIN & TELL HIM
I FOUND HIS AIRWORTHINESS CERTIFICATE
BUT NOT the Radio Lic.

03/06/02

To: FAA

From: Robert M. Barber

Subject: Air Worthiness Certificate

I Recently Purchased A Beechcraft B35 Bonanza N8865A Seriac #D2520. This Plane Does Not Have An Original AWC Only A Photo Copy Of One Issued 11/27/56. I Am Requesting An Original Certificate Be Re-Issued.

Thank You,
Robert M Barber

US Department of Transportation
Federal Aviation Administration

MAJOR REPAIR AND ALTERATION
(Airframe, Powerplant, Propeller, or Appliance)

Form Approved
OMB No. 2120-0020

For FAA Use Only

Office Identification
ASO FSDO-15

INSTRUCTIONS: Print or type all entries. See FAR 43.9, FAR 43 Appendix B, and AC 43.9-1 (or subsequent revision thereof) for instructions and disposition of this form. This report is required by law (49 U.S.C. 1421). Failure to report can result in civil penalty not to exceed $1,000 for each such violation (Section 901 Federal Aviation Act of 1958).

1. Aircraft	Make: Beechcraft Bonanza	Model: B35
	Serial No.: D2520	Nationality and Registration Mark: N8865A
2. Owner	Name *(As shown on registration certificate)*: International Car of Ocala	Address *(As shown on registration certificate)*: 4480 Maricamp Road, Ocala, FL 34471

3. For FAA Use Only

The DATA identified herein complies with the applicable airworthiness requirements and is approved only for the above described aircraft subject to conformity inspection by a person authorized in FAR 43.7

Date 2-17-02 FAA Inspector [signature]

ASO FSDO-15

4. Unit Identification / 5. Type

Unit	Make	Model	Serial No.	Repair	Alteration
AIRFRAME	(As described in Item 1 above)				X
POWERPLANT					
PROPELLER					
APPLIANCE	Type				
	Manufacturer				

6. Conformity Statement

A. Agency's Name and Address	B. Kind of Agency	C. Certificate No.
Dawn Leubner (for A.M.S.) 12757 SE 30 Ct Belleview FL 34420	[X] U.S. Certificated Mechanic	AP 474643909
	[ ] Foreign Certificated Mechanic	
	[ ] Certificated Repair Station	
	[ ] Manufacturer	

D. I certify that the repair and/or alteration made to the unit(s) identified in item 4 above and described on the reverse or attachments hereto have been made in accordance with the requirements of Part 43 of the U.S. Federal Aviation Regulations and that the information furnished herein is true and correct to the best of my knowledge.

Date	Signature of Authorized Individual
2-8-02	[signature]

7. Approval for Return To Service

Pursuant to the authority given persons specified below, the unit identified in item 4 was inspected in the manner prescribed by the Administrator of the Federal Aviation Administration and is [X] APPROVED [ ] REJECTED

BY						
	[ ]	FAA Flt. Standards Inspector	[ ]	Manufacturer	[X]	Inspection Authorization
	[ ]	FAA Designee	[ ]	Repair Station	[ ]	Person Approved by Transport Canada Airworthiness Group

Other *(Specify)*

Date of Approval or Rejection	Certificate or Designation No.	Signature of Authorized Individual
2-14-02	295608808IA	[signature] 295608808IA

FAA Form 337 (12-88)

NOTICE

Weight and balance or operating limitation changes shall be entered in the appropriate aircraft record. An alteration must be compatible with all previous alterations to assure continued conformity with the applicable airworthiness requirements.

8. Description of Work Accomplished
(If more space is required, attach additional sheets. Identify with aircraft nationality and registration mark and date work completed.)

N8865A Beechcraft Bonanza B-35 S/N D2520
Modifications to the airframe are as follow:

1) Installation of vernier mixture control: Removed old push-pull mixture control, Beech P/N 35-944022, and installed in same panel location, a new larger control bracket in place of old with same mount location, and new vernier mixture control P/N A-790, FAA/PMA. Routed new cable through same firewall location into engine compartment, providing standoff clamp, and secured cable end at fuel servo and clamped cable sheath and safetied. Operation of mixture control checked through vernier positions, full rich, and cut-off, checked good. See sheet 4.

2) Installation of upgraded flap and gear position lights: Removed old position light sockets, and installed 4 new press to test light sockets, P/N S2581-1, using existing wiring. Indicator light lens for gear down is green, gear up is red, flap up is violet, and flap down is white. Operational check of lights with flap and gear system checked good. See sheet 2 & 3.

3) Installation of new upgraded ignition switch: To prevent radio spiking, old ignition Switch with battery position is removed and new TCM 10-357290-1 ignition switch installed in same panel position with battery position removed from switch and battery master switch left to control electrical bus. Ground operational check of master relays, magnetos, all checked good. See sheet 1.a+b

4) Installation of anodized knobs: Removed existing plastic knobs on mixture, throttle, and propeller controls, and installed new anodized metal knobs in accordance with Air Research Systems instructions. See sheet 5.

5) Position change of vacuum gage: To provide for better visibility, existing vacuum gage Removed from location above visual gear indicator, to right instrument panel. Metal plate secured in hole cut out to accommodate smaller sized gauge. New hose plumbing routed clear of yoke to existing hose junction. Previous location cut out covered with late and fastened with tinnerman plates and screws. Operational check of vacuum system checked good. See sheet 6.

6) Installation of upgraded cabin door handle: For improved safety, removed old style inside cabin door handle, P/N 35-400426, and installed upgraded Beech handle P/N 95-380010. Removed old plate assy P/N 35-400378 and installed P/N 35-400395. Removed old handle shaft, P/N 35-400420, and installed upgraded, stronger shaft P/N 35-400464-6. Replaced upper catch wire P/N 105774M-ZB04200 with new wire. Complied with AD 97-14-15, inspection and check of door handle and safety plate. Ops check good. See sheet 6.

No weight and balance change

END

X Additional Sheets Are Attached

SHEET 1a

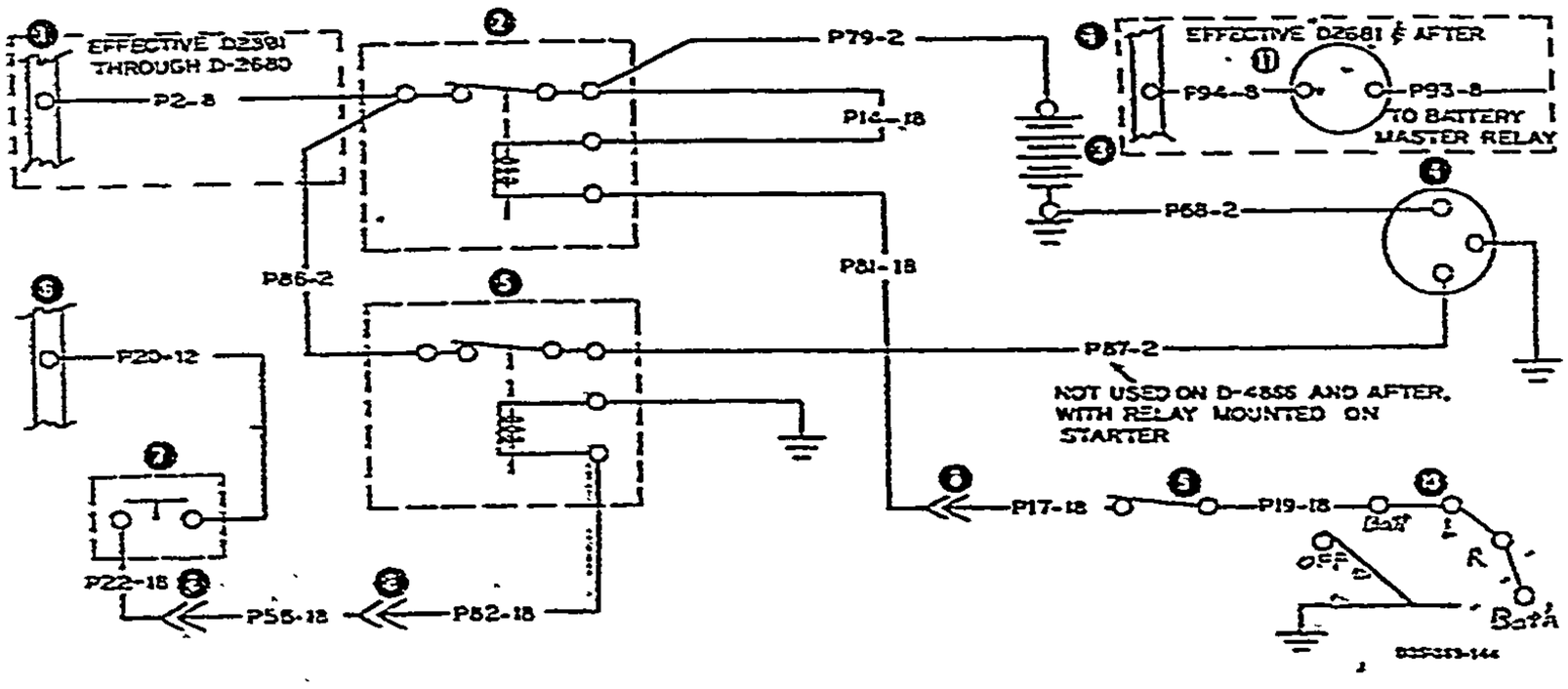

1. Buss bar
2. Battery master relay
3. Battery
4. Starting motor
5. Starter relay
6. Buss bar
7. Starter switch
8. Connector
9. Battery master switch
10. Ignition switch
11. Ammeter

STARTER CIRCUIT
Airplane Serial No. D-2391 thru D-6161

Replacement of original ignition switch with new TCM 10-357290-1 ignition switch, eliminates battery position on switch and avoids spiking the avionics. New switch and wiring comparable to later model aircraft

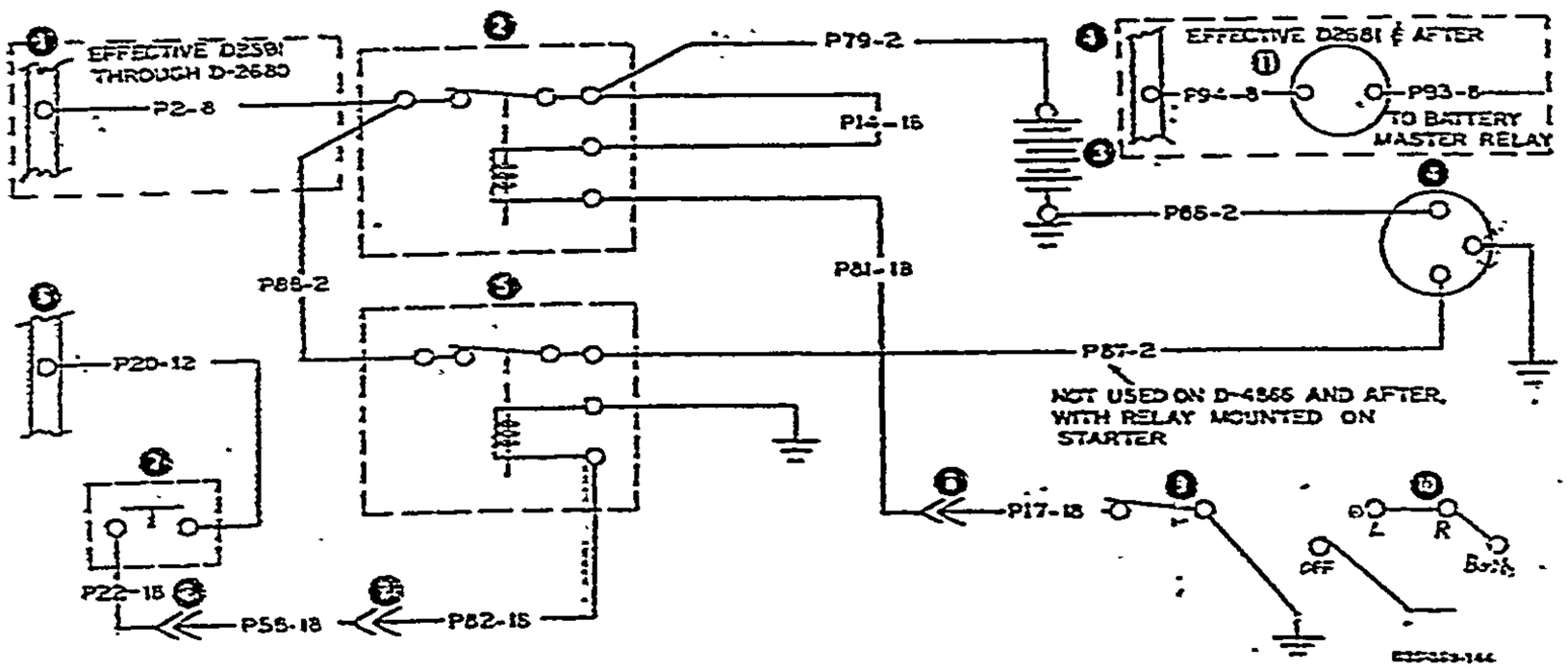

1. Buss bar
2. Battery master relay
3. Battery
4. Starting motor
5. Starter relay
6. Buss bar
7. Starter switch
8. Connector
9. Battery master switch
10. Ignition switch
11. Ammeter

MODIFIED STARTER CIRCUIT

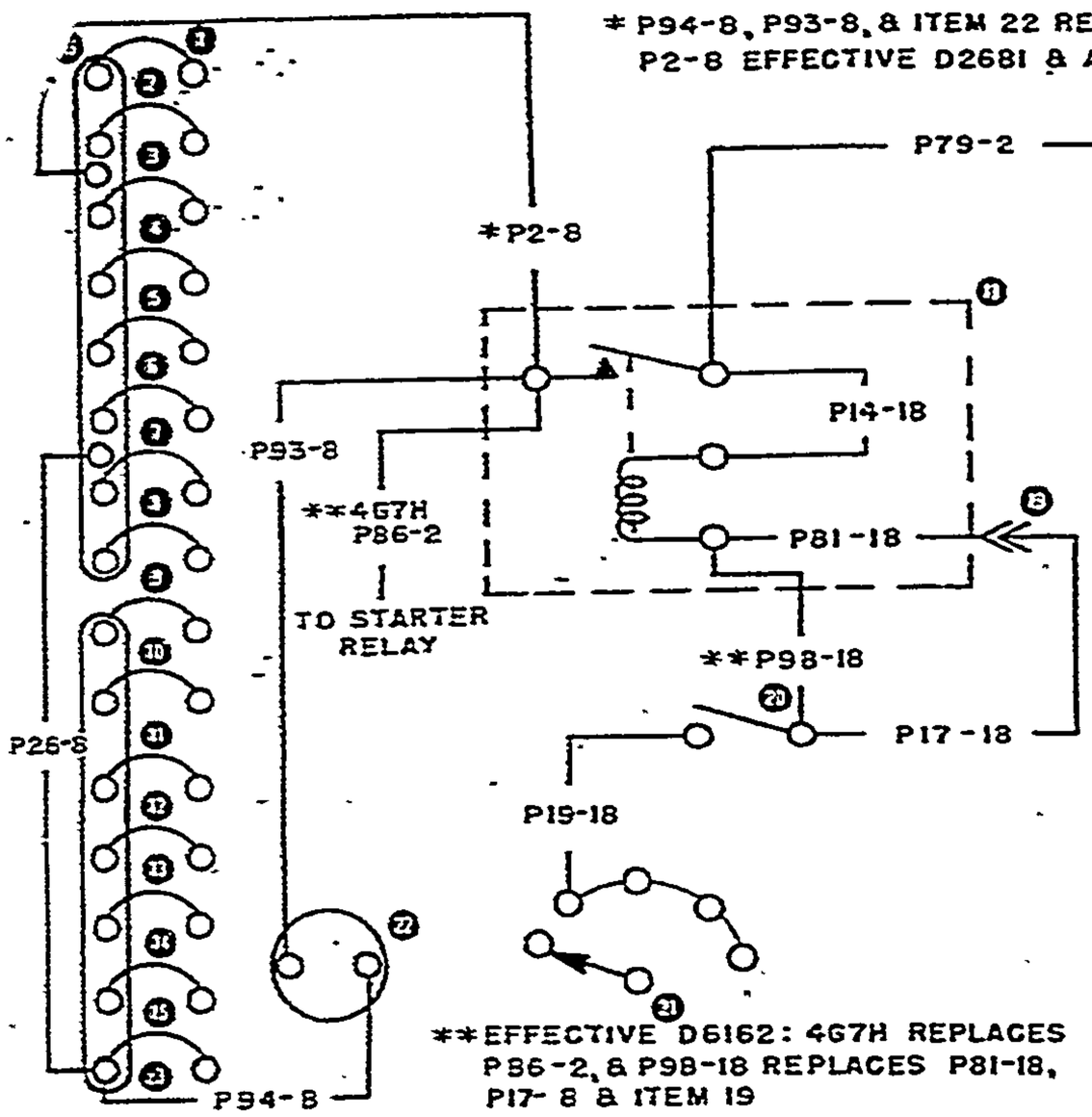

1. Navigation light circuit breaker
2. Flare switch circuit breaker
3. RH landing light circuit breaker
4. LH landing light circuit breaker
5. Rotating beacon circuit breaker
6. Flap motor circuit breaker
7. Cabin lamps, primer, turn and bank indicator circuit breaker
8. Landing gear motor circuit breaker
9. Fuel quantity indicator circuit breaker
10. Stall warning indicator circuit breaker
11. Landing gear throttle warning horn circuit breaker
12. Oil temperature indicator and cylinder head temperature indicator circuit breaker
13. Flap position indicator and instrument lights circuit breaker
14. Radio master circuit breaker
15. Generator circuit breaker
16. Bus bar
17. 12-volt battery
18. Battery master relay
19. Connector
20. Battery master switch
21. Ignition switch
22. Ammeter
23. Bus bar

835-369-111

BUS AND BATTERY CIRCUIT
Airplane Serial No. D-2391 thru D-6561

SHEET 1b

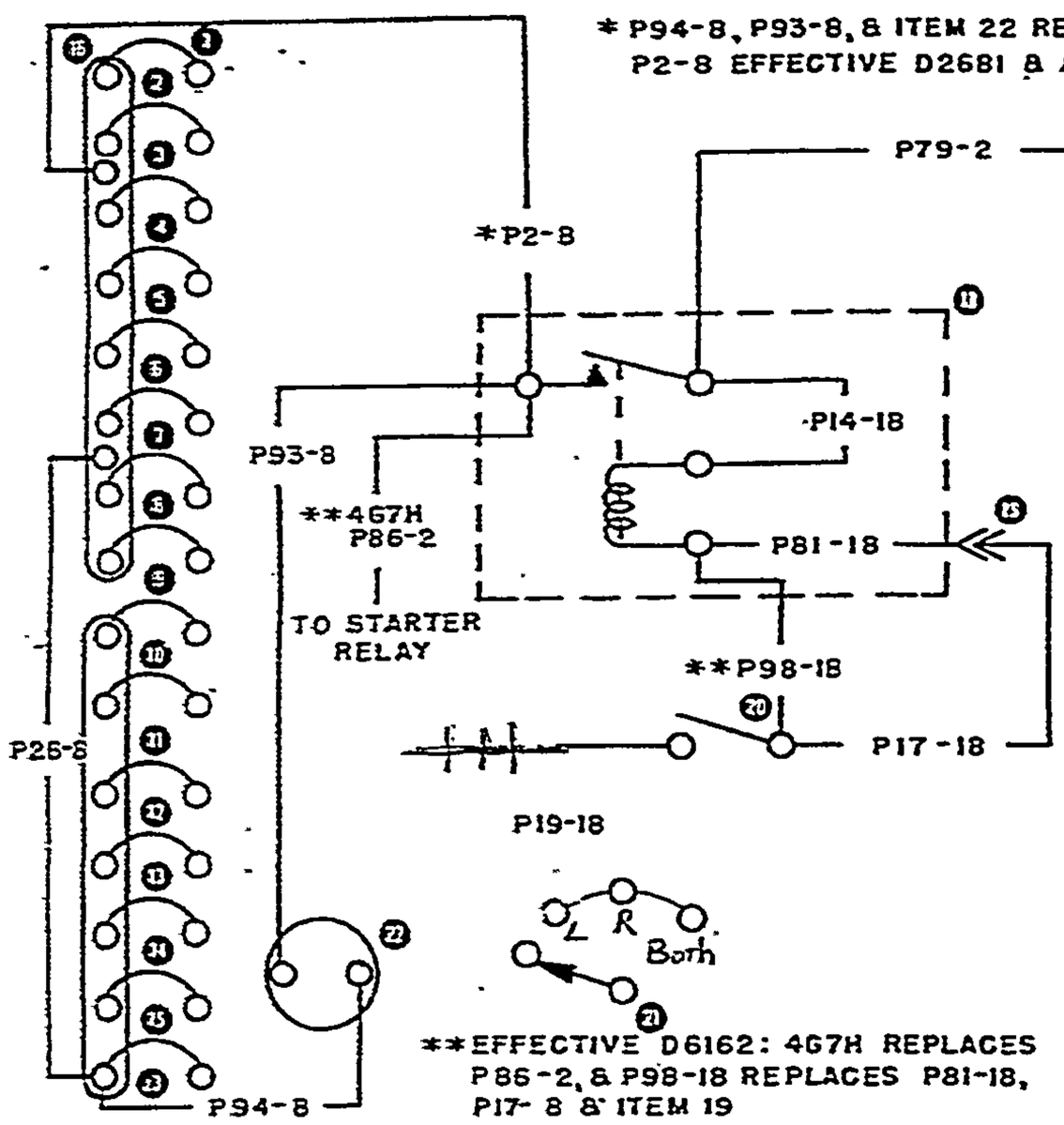

1. Navigation light circuit breaker
2. Flare switch circuit breaker
3. RH landing light circuit breaker
4. LH landing light circuit breaker
5. Rotating beacon circuit breaker
6. Flap motor circuit breaker
7. Cabin lamps, primer, turn and bank indicator circuit breaker
8. Landing gear motor circuit breaker
9. Fuel quantity indicator circuit breaker
10. Stall warning indicator circuit breaker
11. Landing gear throttle warning horn circuit breaker
12. Oil temperature indicator and cylinder head temperature indicator circuit breaker
13. Flap position indicator and instrument lights circuit breaker
14. Radio master circuit breaker
15. Generator circuit breaker
16. Bus bar
17. 12-volt battery
18. Battery master relay
19. Connector
20. Battery master switch
21. Ignition switch
22. Ammeter
23. Bus bar

* #20 Battery master switch acts without battery position on ignition switch.

835-369-111

BUS AND BATTERY CIRCUIT
modified

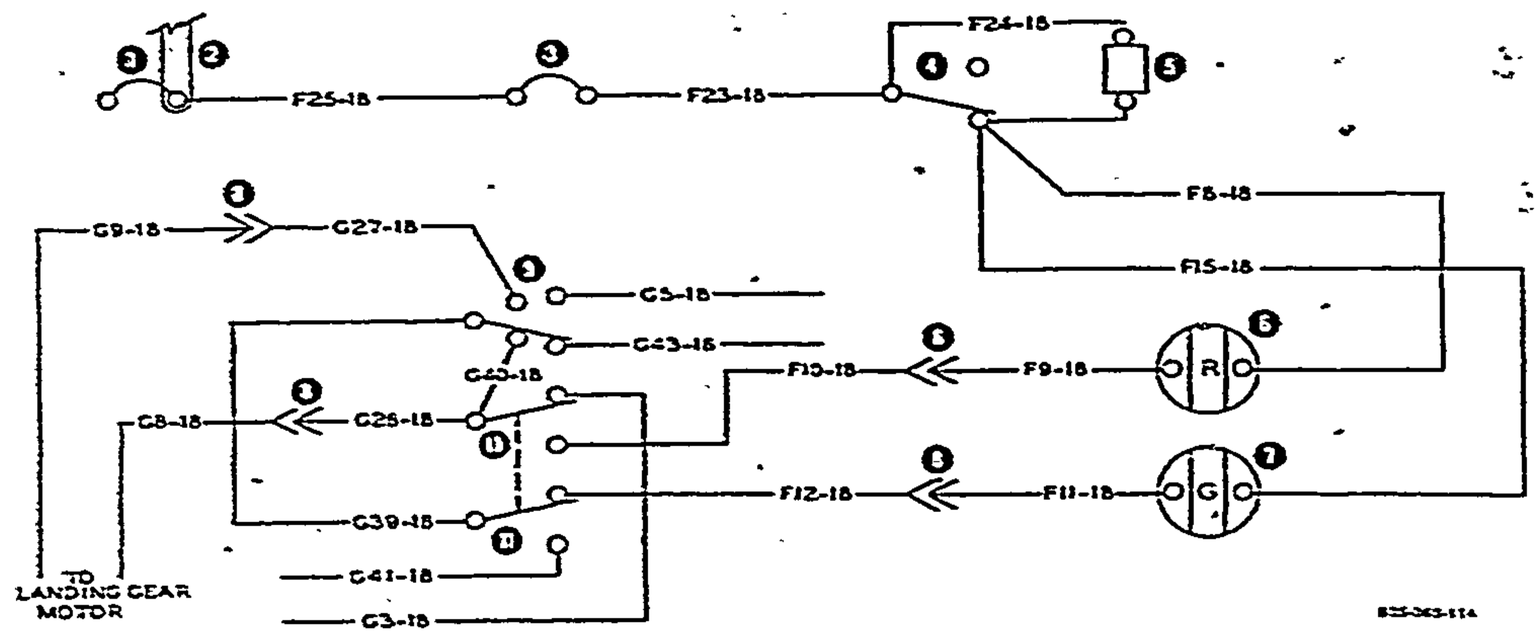

1. Landing gear motor circuit breaker
2. Buss bar
3. Landing gear position indicator light circuit breaker
4. Navigation light switch
5. Resistor located on navigation light switch (100 ohm)
6. Landing gear up indicator light (red)
7. Landing gear down indicator light (green)
8. Connector
9. Down limit and brake switch
10. Up position light and up limit switch
11. Down position light and up brake switch

LANDING GEAR POSITION INDICATOR CIRCUIT
Airplane Serial No. D-1501 thru D-2800

SHEET 2 Upgrade of landing gear indicator light sockets

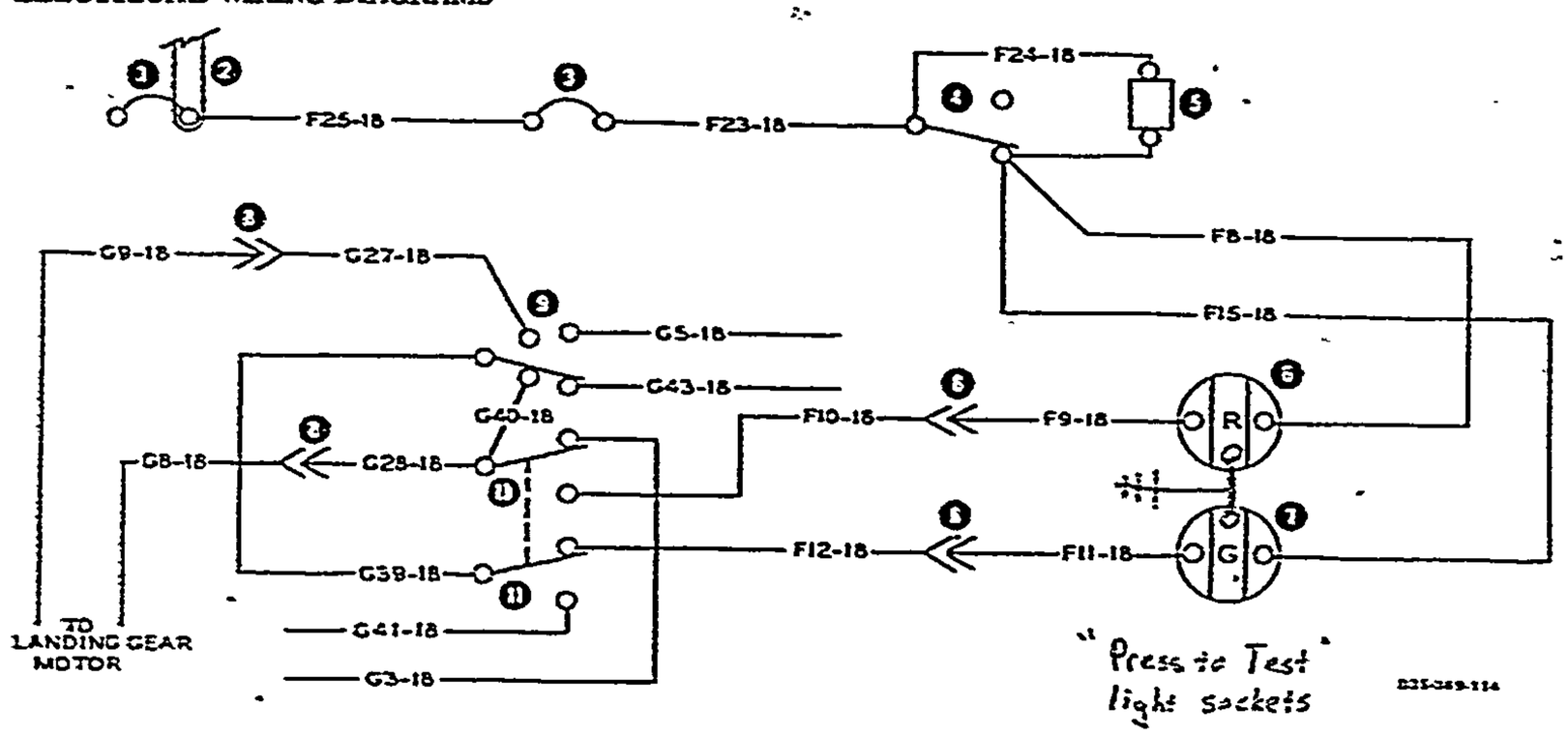

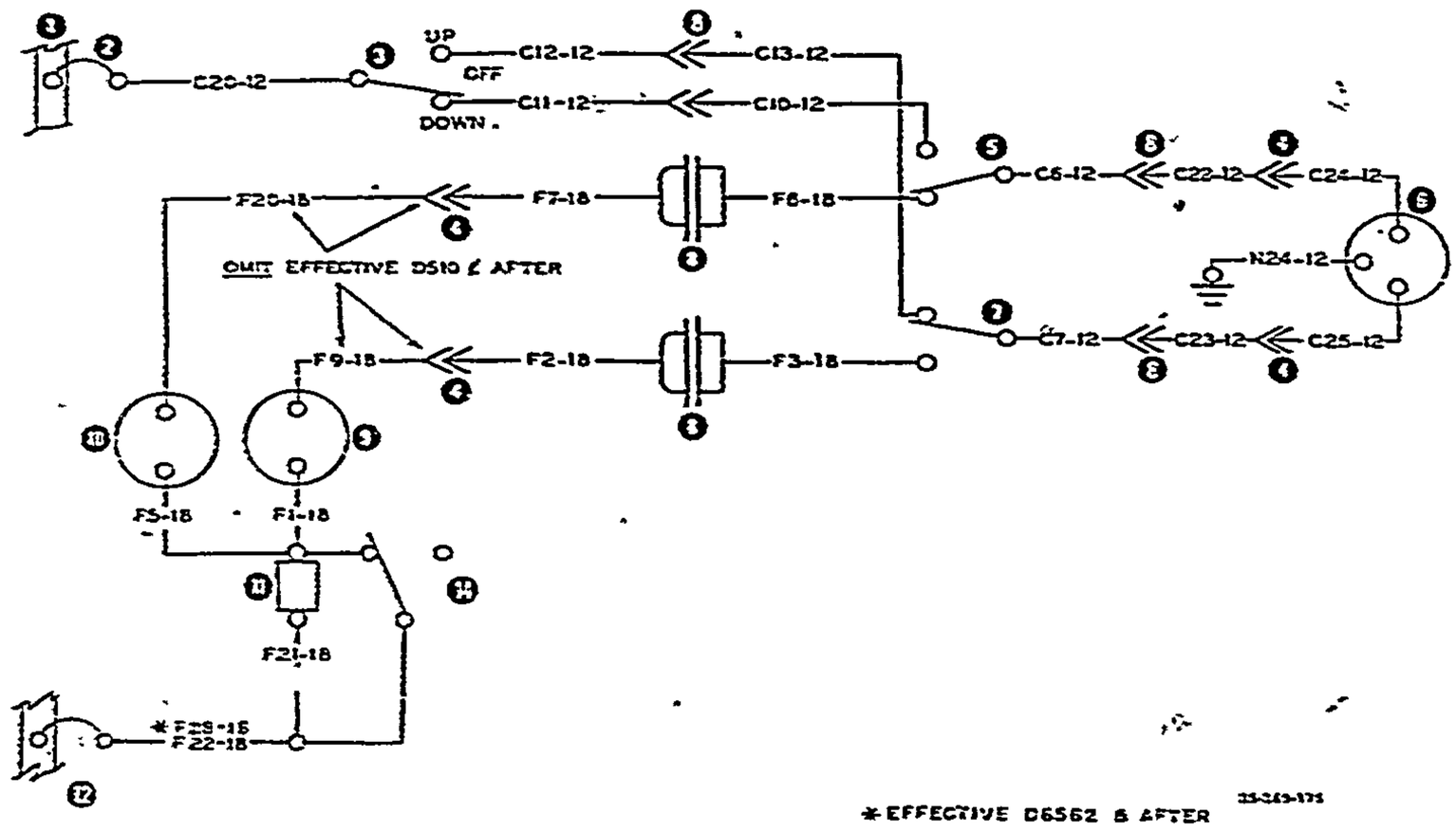

1. Bus bar
2. Flap circuit breaker
3. Flap position switch
4. Connector
5. Down limit switch
6. Flap motor
7. Up limit switch
8. Wing break connector
9. Flap up indicator (green)
10. Flap down indicator (red)
11. Resistor
12. Flap position indicator and position light circuit breaker
13. Right wing break connector
14. Navigation light switch

FLAP CONTROL AND POSITION INDICATOR CIRCUIT
Airplane Serial No. D-1 thru D-6341

Revised October 27, 1951

SHEET 3 Upgrade of Flap indicator light sockets

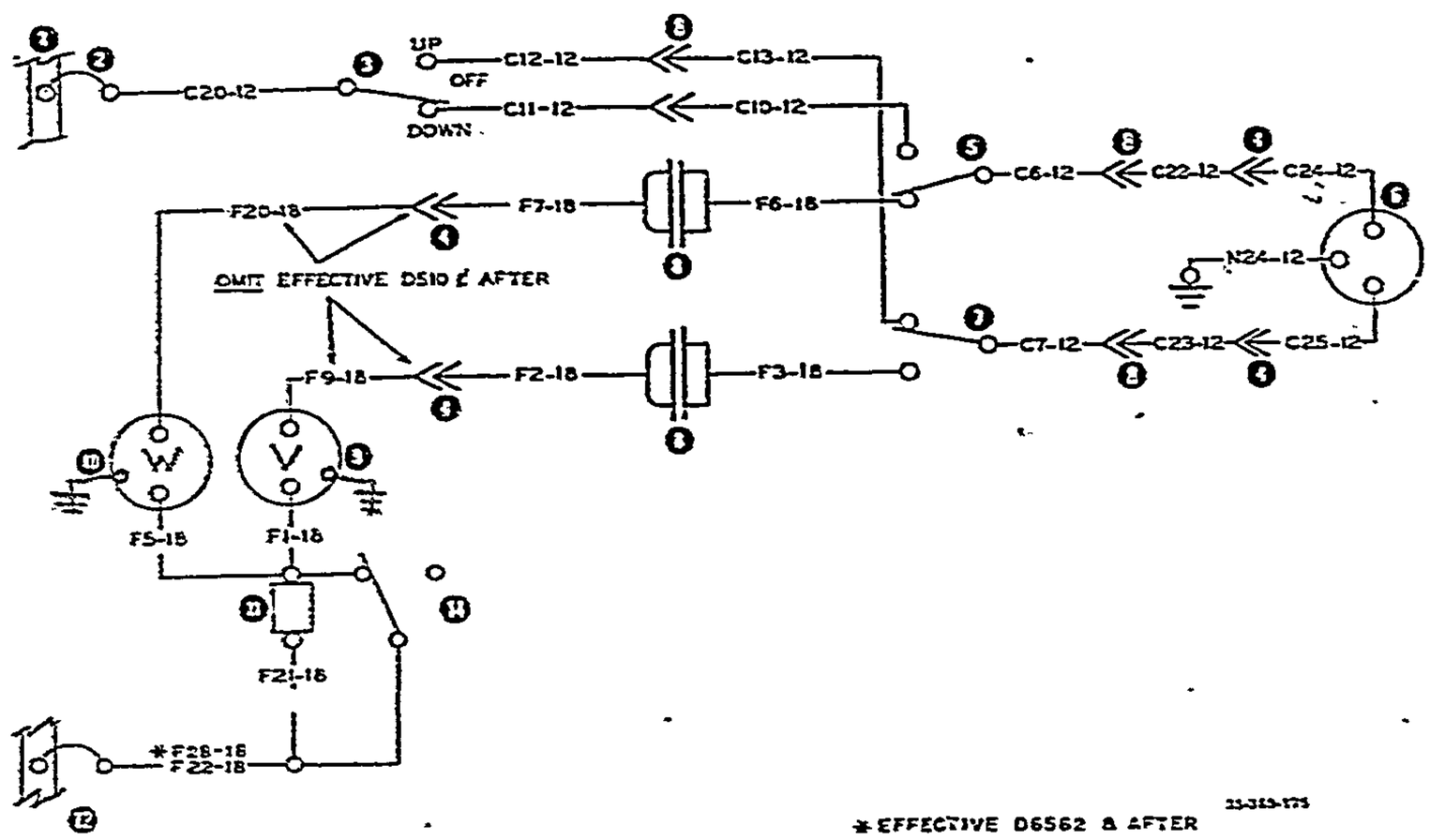

1. Bus bar
2. Flap circuit breaker
3. Flap position switch
4. Connector
5. Down limit switch
6. Flap motor
7. Up limit switch
8. Wing break connector
9. Flap up indicator (violet)
10. Flap down indicator (white)
11. Resistor
12. Flap position indicator and position light circuit breaker
13. Right wing break connector
14. Navigation light switch

FLAP CONTROL AND POSITION INDICATOR CIRCUIT
"Press to Test" light sockets

INSTALLATION INSTRUCTIONS

Control Knob Assemblies

FAA-STC/PMA-exact replacement for original parts.

SHEET 4

Installation of A-790, vernier mixture control with anodized control knobs on throttle, prop, and mixture.

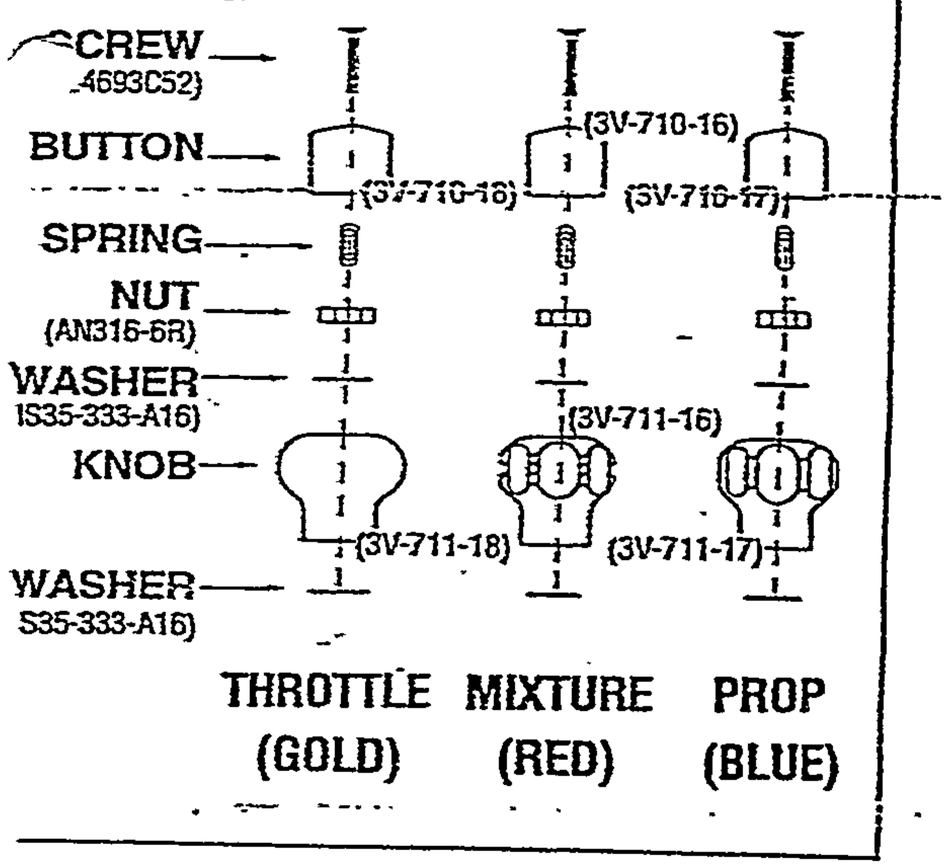

TO REMOVE EXISTING ASSEMBLIES:

1. Remove Screw from Button.
2. Remove Button.
3. Remove Spring. Retain Spring.
4. Remove Nut securing Knob.
5. Remove Washer.
6. Remove Knob.

TO INSTALL NEW CONTROL KNOB ASSEMBLIES & HARDWARE, FOLLOW ILLUSTRATION ABOVE.

AVIATION RESEARCH SYSTEMS, INC.
SANDY RIVER AIRPORT
42313 Oral Hull Rd. • Sandy, OR 97055
Ph. (503)668-4542 • Fax: (503)668-8359

ENGINEERING DATA

Control Model No.	Control Type	Stroke at 0 Routing	Decrease In Stroke per 360° of Bend	Control Model No.	Control Type	Stroke at 0° Routing	Decrease of Stroke 360° of
A-700	Button Lock (Wire End)	4.00**	0.50"	A810	Friction Lock (1/4-28)	3.50"	0.35
A-730	Glide Free (Wire End)	4.00**	0.50"	A920	Push-Pull (10-32)	3.37"	0.35
A-740	Ratchet (Wire End)	4.00**	0.50"	A930	Push-Pull (1/4-28)	3.37"	0.35
A-750	Vernier (10-32)	3.37**	0.35"	A970	Vernier (1/4-28)	3.50"	0.35
→ A-790	Vernier (Wire End)	4.00**	0.35"	A1550	Push-Pull (10-32) with Bulkhead Fittings	3.37"	0.35
A-800	Friction Lock (10-32)	3.37**	0.35"				

*Length of exposed wire. **Recommended minimum bending radius for all controls is 5" (never less than 3")

VERNIER CONTROLS

Vernier controls assure smooth operation - cannot creep. For coarse adjustment, depress center button and push or pull. For fine a[illegible] on knob. Smooth acting at all temperatures. Casing is made of tightly wound galvanized steel wire. Inner shaft is stainless s[illegible] Models A-750 and A-970) or stainless steel wire (Model A-790). Low-friction operation is provided by an internal extruded Teflon liner [illegible] two 1-1/4" dia. plastic knob with 3/4" dia. aluminum release button. A protective black PVC cover is available as an option on contro[illegible] knob color - black, red or blue (FAA Color Code: Black - Throttle, Red - Mixture, Blue - Prop), and knob design (see below).

Throttle Control (Black) (FAA Color) Or White

Mixture Control (Red)

Prop Control (Blue)

PRODUCTION APPROVAL LISTING - SUPPLEMENT NO. 2

FEDERAL AVIATION ADMINISTRATION - PARTS MANUFACTURER APPROVAL

AVIATION RESEARCH SYSTEMS, INCORPORATED
SANDY RIVER AIRPORT
42313 SOUTHEAST ORAL HULL ROAD
SANDY, OREGON 97055

FAA-APPROVED DESIGN DATA	APPROVED REPLACEMENT FOR	FAA DESIGN APPROVAL MEANS	INSTALLATION ELIGIBILITY
PART NAME: THROTTLE KNOB P/N: 3V-711-15 IN ACCORDANCE WITH DWG. NO. ARS100022-11DRW, DTD 3/31/94 OR LATER FAA APPROVED REVISIONS	MODIFICATION PART	LETTER OF DESIGN APPROVAL PER FAR 21.303(C)	BEECH MODELS: 33, 35 & 36 SERIES
PART NAME: PROPELLER KNOB P/N: 3V-711-17 IN ACCORDANCE WITH DWG. NO. ARS100022-12DRW, DTD 3/31/94 OR LATER FAA APPROVED REVISIONS	MODIFICATION PART	LETTER OF DESIGN APPROVAL PER FAR 21.303(C)	BEECH MODELS: 33, 35 & 36 SERIES
PART NAME: MIXTURE KNOB P/N: 3V-711-16 IN ACCORDANCE WITH DWG. NO. ARS100022-13DRW, DTD 3/31/94 OR LATER FAA APPROVED REVISIONS	MODIFICATION PART	LETTER OF DESIGN APPROVAL PER FAR 21.303(C)	BEECH MODELS: 33, 35 & 36 SERIES
PART NAME: LOCKING BUTTON P/N: 3V-710-18 IN ACCORDANCE WITH DWG. NO. ARS100022-10DRW, DTD 4/01/94 OR LATER FAA APPROVED REVISIONS	MODIFICATION PART	LETTER OF DESIGN APPROVAL PER FAR 21.303(C)	BEECH MODELS: 33, 35 & 36 SERIES
PART NAME: LOCKING BUTTON P/N: 3V-710-17 IN ACCORDANCE WITH DWG. NO. ARS100022-10DRW, DTD 4/01/94 OR LATER FAA APPROVED REVISIONS	MODIFICATION PART	LETTER OF DESIGN APPROVAL PER FAR 21.303(C)	BEECH MODELS: 33, 35 & 36 SERIES
PART NAME: LOCKING BUTTON P/N: 3V-710-16 IN ACCORDANCE WITH DWG. NO. ARS100022-10DRW, DTD 4/01/94 OR LATER FAA APPROVED REVISIONS	MODIFICATION PART	LETTER OF DESIGN APPROVAL PER FAR 21.303(C)	BEECH MODELS: 33, 35 & 36 SERIES

**********END OF LISTING**********

Original Signed by
Carl D. Pike

CARL D. PIKE, MANAGER
SEATTLE MANUFACTURING INSPECTION
DISTRICT OFFICE

SHEET 5

DATE: AUGUST 17, 1994

F:\HOME\ANM108S\PMA\AVRSCH2.DOC

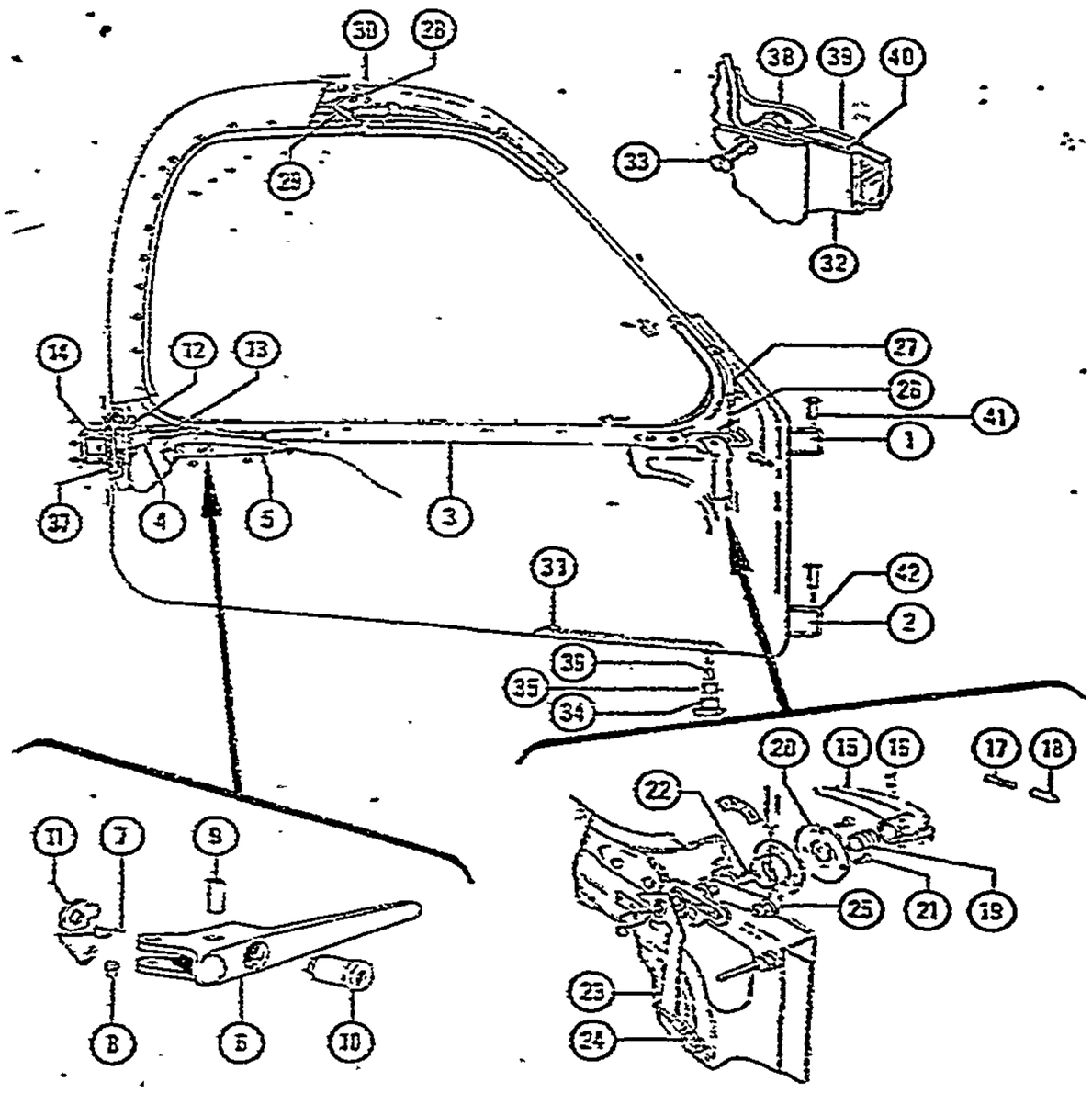

SHEET 6:

Upgrade of cabin door handle, item 15, door shaft, item 22, and inside plate, item 20, to later model aircraft style.

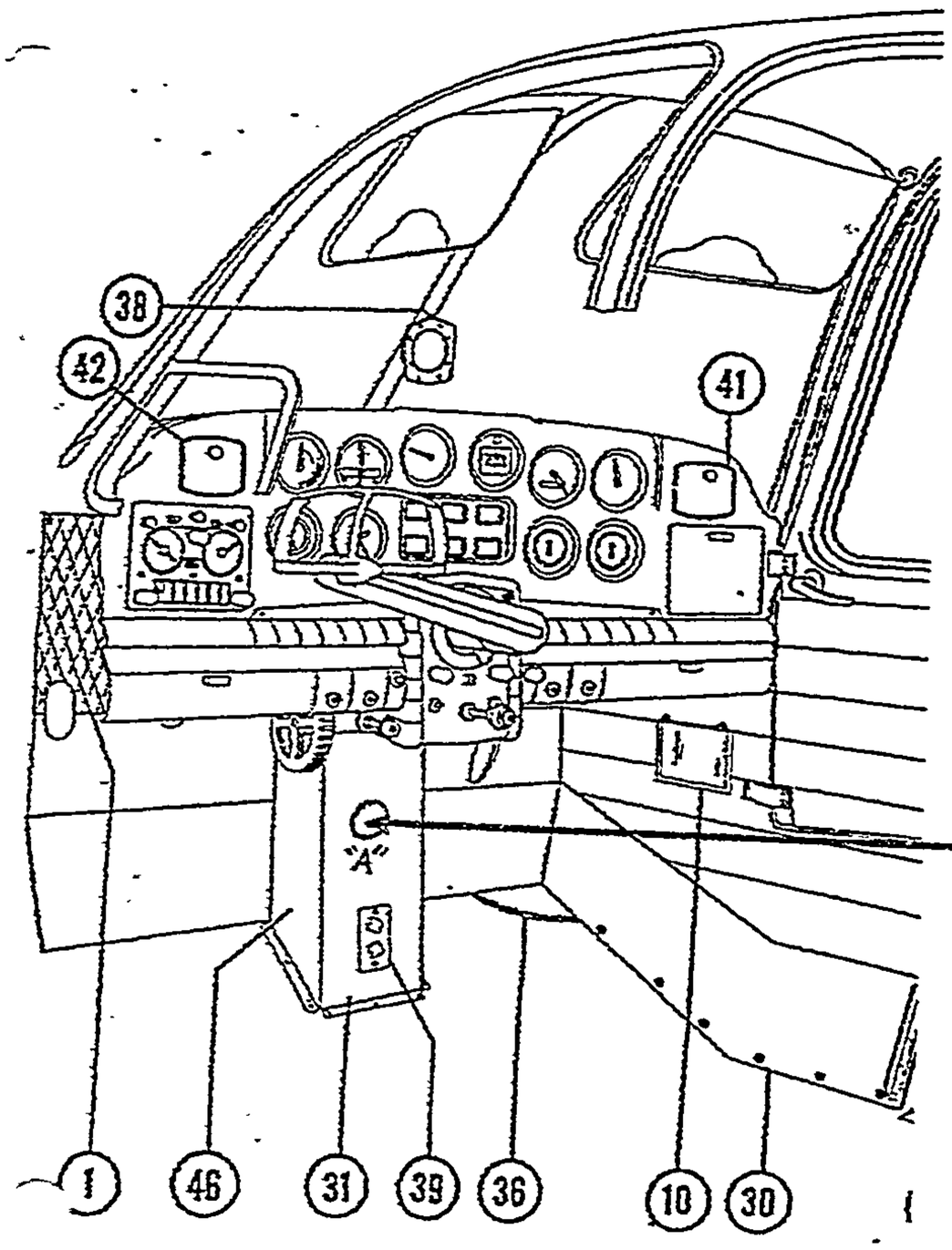

MODEL 35 THRU G35 PARTS CATALOG

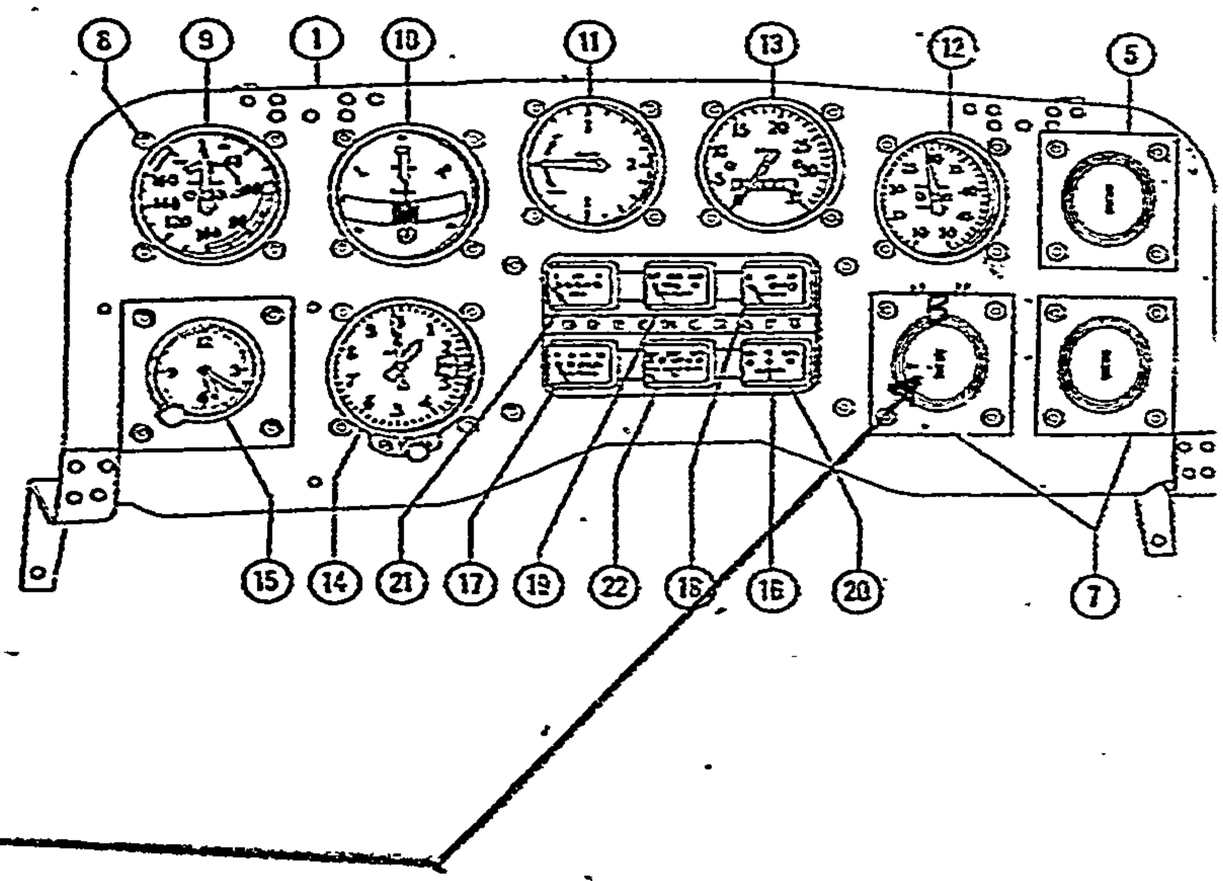

Relocation of existing vacuum gauge at pedestal panel, position "A", to upper right instrument panel, position "B". New hose re-routed clear of control mechanism.

SHEET 6

US Department of Transportation
Federal Aviation Administration

MAJOR REPAIR AND ALTERATION
(Airframe, Powerplant, Propeller, or Appliance)

Form Approved
OMB No. 2120-0020

For FAA Use Only

Office Identification
ASO FSDO-15

INSTRUCTIONS: Print or type all entries. See FAR 43.9, FAR 43 Appendix B, and AC 43.9-1 (or subsequent revision thereof) for instructions and disposition of this form. This report is required by law (49 U.S.C. 1421). Failure to report can result in civil penalty not to exceed $1,000 for each such violation (Section 901 Federal Aviation Act of 1958).

1. Aircraft	Make Beechcraft Bonanza	Model B35
	Serial No. D2520	Nationality and Registration Mark N8865A
2. Owner	Name *(As shown on registration certificate)* International Car of Ocala	Address *(As shown on registration certificate)* 4480 Maricamp Road Ocala, FL 34471

3. For FAA Use Only

4. Unit Identification				5. Type	
Unit	Make	Model	Serial No.	Repair	Alteration
AIRFRAME	*(As described in Item 1 above)*				X
POWERPLANT					
PROPELLER					
APPLIANCE	Type Manufacturer				

6. Conformity Statement

A. Agency's Name and Address	B. Kind of Agency		C. Certificate No.
Dann Leubner 12757 SE 30th CT Belleview, FL 34420	X	U.S. Certificated Mechanic	474643909 A&P
		Foreign Certificated Mechanic	
		Certificated Repair Station	
		Manufacturer	

D. I certify that the repair and/or alteration made to the unit(s) identified in item 4 above and described on the reverse or attachments hereto have been made in accordance with the requirements of Part 43 of the U.S. Federal Aviation Regulations and that the information furnished herein is true and correct to the best of my knowledge.

Date	Signature of Authorized Individual
12-28-01	D. Leubner A/P 474643909

7. Approval for Return To Service

Pursuant to the authority given persons specified below, the unit identified in item 4 was inspected in the manner prescribed by the Administrator of the Federal Aviation Administration and is ☒ APPROVED ☐ REJECTED

BY		FAA Flt. Standards Inspector		Manufacturer	X	Inspection Authorization	Other *(Specify)*
		FAA Designee		Repair Station		Person Approved by Transport Canada Airworthiness Group	

Date of Approval or Rejection	Certificate or Designation No.	Signature of Authorized Individual
12-31-01	295608808 IA	295608808IA

FAA Form 337 (12-88)

NOTICE

Weight and balance or operating limitation changes shall be entered in the appropriate aircraft record. An alteration must be compatible with all previous alterations to assure continued conformity with the applicable airworthiness requirements.

8. Description of Work Accomplished
(If more space is required, attach additional sheets. Identify with aircraft nationality and registration mark and date work completed.)

N8865A Beechcraft Bonanza B-35 S/ND2520 12-28-01

Removed old style short, single piece windshield P/N WG2050, and installed new Beryl D'Shannon single-piece, sloped windshield kit in accordance with STC SA997SO installation instructions, revision C, dated March 1, 1992. Kit composed of : window glass P/N B19005-211, metal support strip P/N B19015, attatch hardware P/N B1900, glareshield, vent, and light assy. P/N B19030. Primed and painted windshield surround to match aircraft paint scheme.

ADF receiver KR 85 and ADF indicator KI225 removed from aircraft. Audio panel assy on top of old glareshield removed and inserted into old ADF rack. Wire harnesses repositioned and secured. Operational check out of radios and intercom system checked good. Weight and Balance data updated and inserted into POH and aircraft records. Work done in accordance with AC 43.13 1B and 2A.

——————————END——————————

☒ Additional Sheets Are Attached

United States of America

Department of Transportation—Federal Aviation Administration

Supplemental Type Certificate

Number SA997SO

This certificate, issued to Beryl D'Shannon Aviation Specialties, Inc.

certifies that the change in the type design for the following product with the limitations and conditions therefor as specified hereon meets the airworthiness requirements of Part 3/03 *of the* Civil Air *Regulations.*

PROPRIETARY INFORMATION
D'SHANNON PRODUCTS
NOT TO BE REPRODUCED

SERIAL NO. D2520
MODEL NO. B-35 N8865A
AUTHORIZED BY AL

Original Product—Type Certificate Number: 3A15, A-777

Make: Beech

Model: All models on 3A15 (Part 3)
All models on A-777 (Part 03)

Description of Type Design Change:

Installation of a single-piece sloped windshield in accordance with Beryl D'Shannon Aviation Specialties, Inc., Drawing B19000, Revision D, dated November 9, 1979, (or later FAA approved revision).

Limitations and Conditions: This approval should not be extended to other aircraft of the same model on which other approved modifications have been made unless it has first been determined that the interrelationship between these various modifications will have no adverse affect on the airworthiness of the aircraft. This determination should include consideration of significant changes in weight distribution such as an increase in the fixed disposable weight in the fuselage.

This certificate and the supporting data which is the basis for approval shall remain in effect until surrendered, suspended, revoked, or a termination date is otherwise established by the Administrator of the Federal Aviation Administration.

Date of application: April 24, 1976

Date of issuance: June 7, 1976

Date issued:

Intermodal: May 7, 1979, Nov. 21, 1979

By direction of the Administrator

Francis Rock

FRANCIS C. ROCK, *(Signature)* Assistant Chief,
Engineering and Manufacturing Branch
Flight Standards Division
(Title)

Any alteration of this certificate is punishable by a fine of not exceeding $1,000, or imprisonment not exceeding 3 years, or both.

This certificate may be transferred in accordance with FAR 21.47.

FAA Form 8110-2 (10-68)

FAA

US Department of Transportation
Federal Aviation Administration

MAJOR REPAIR AND ALTERATION
(Airframe, Powerplant, Propeller, or Appliance)

Form Approved
OMB No. 2120-0020

For FAA Use Only

Office Identification
ASO FSDO-15

INSTRUCTIONS: Print or type all entries. See FAR 43.9, FAR 43 Appendix B, and AC 43.9-1 (or subsequent revision thereof) for instructions and disposition of this form. This report is required by law (49 U.S.C. 1421). Failure to report can result in civil penalty not to exceed $1,000 for each such violation (Section 901 Federal Aviation Act of 1958).

1. Aircraft	Make Beech	Model B35
	Serial No. D2520	Nationality and Registration Mark N8865A
2. Owner	Name *(As shown on registration certificate)* Ted Bowman	Address *(As shown on registration certificate)* 2440 NE 7th St. Ocala Fl. 34470

3. For FAA Use Only

4. Unit Identification / **5. Type**

Unit	Make	Model	Serial No.	Repair	Alteration
AIRFRAME	(As described in Item 1 above)				X
POWERPLANT					
PROPELLER					
APPLIANCE	Type Manufacturer				

6. Conformity Statement

A. Agency's Name and Address	B. Kind of Agency		C. Certificate No.
Laris D. Hatcher Aircraft Maintenance Specialists, Inc. 800 SW 69th Avenue Ocala, Fl. 34474	X	U.S. Certificated Mechanic	AP291387095
		Foreign Certificated Mechanic	
		Certificated Repair Station	
		Manufacturer	

D. I certify that the repair and/or alteration made to the unit(s) identified in item 4 above and described on the reverse or attachments hereto have been made in accordance with the requirements of Part 43 of the U.S. Federal Aviation Regulations and that the information furnished herein is true and correct to the best of my knowledge.

Date	Signature of Authorized Individual
9/10/01	Laris D. Hatcher

7. Approval for Return To Service

Pursuant to the authority given persons specified below, the unit identified in item 4 was inspected in the manner prescribed by the Administrator of the Federal Aviation Administration and is [X] APPROVED ☐ REJECTED

BY		FAA Flt. Standards Inspector		Manufacturer	X	Inspection Authorization	Other *(Specify)*
		FAA Designee		Repair Station		Person Approved by Transport Canada Airworthiness Group	

Date of Approval or Rejection	Certificate or Designation No.	Signature of Authorized Individual
0/10/01	291387095IA	Laris D. Hatcher

FAA Form 337 (12-88)

NOTICE

Weight and balance or operating limitation changes shall be entered in the appropriate aircraft record. An alteration must be compatible with all previous alterations to assure continued conformity with the applicable airworthiness requirements.

8. Description of Work Accomplished
(If more space is required, attach additional sheets. Identify with aircraft nationality and registration mark and date work completed.)

N8865A Tac 1992 Date 9/10/01

Remove generator and voltage regulator. Install new Jasco #6555-1 Alternator Kit (50a.) In accordance with Jasco Alternator System Installation Instructions dated june 16 1965.
This is from STC SA999WE Skytronics, Inc.
The interrelationship between this change and any other previously approved modifications will introduce no adverse effect upon the airworthiness of this aircraft.
All work performed I/A/W STC SA999WE Beech maintance manual and AC43-13-2A

END

| | Additional Sheets Are Attached

United States of America

Department of Transportation — Federal Aviation Administration

Supplemental Type Certificate

Number SA999WE

This certificate, issued to Skytronics, Inc.

certifies that the change in the type design for the following product with the limitations and conditions thereto as specified hereon meets the airworthiness requirements of Part 3 of the Civil Air Regulations. (See Type Certificate Data Sheet No. A-777)

Original Product — Type Certificate Number: 777
Make: Beech
Model: 35, A35, B35, C35, D35, E35, F35, G35 and 35R (S/N D-1 through D-4865)

Description of Type Design Change: Installation of a Jasco #6540-1 (35a.) Alternator Kit or Jasco #6555-1 (50a.) Alternator Kit in accordance with Jasco Alternator System Installation Instructions dated June 16, 1965 or the installation of Jasco Alternator part number 6560-1, a 12 volt system per FAA sealed Skytronics, Inc. Top Drawing 3015 no change revision, or later FAA approved revision. This modification pertains only to aircraft equipped with Continental E series engines.

Limitations and Conditions: This approval should not be extended to other specific airplanes of this model on which other previously approved modifications are incorporated unless it is determined that the interrelationship between this change and any of those other previously approved modifications will introduce no adverse effect upon the airworthiness of that airplane.

This certificate and the supporting data which is the basis for approval shall remain in effect until surrendered, suspended, revoked, or a termination date is otherwise established by the Administrator of the Federal Aviation Administration.

Date of application: March 15, 1965 — Date amended: March 13, 1969

Date of issuance: June 28, 1965 — Date amended: October 28, 1976

FEDERAL AVIATION ADMINISTRATION

By direction of the Administrator

(Signature)

Chief, Aircraft Engineering Division
(Title)

Any alteration of this certificate is punishable by a fine of not exceeding $1,000, or imprisonment not exceeding 3 years, or both.

This certificate may be transferred in accordance with FAR 21.47.

FAA Form 8110-2 (10-68)

SKYTRONICS
INCORPORATED

The following JASCO Alternator's are FAA approved for installation on the indicated aircraft.

6560-1 (12 Volt)

Cessna 150, 170 , 172, 175	STC # SA971WE	PMA Issued,
Beech 35 Series	STC # SA999WE	PMA Issued
Navion and "A"	STC # SA1246WE	PMA Issued

6555-1 (12 Volt)

Grumman G-164	STC # SA2015WE	PMA Issued
Cessna A-188 Series	STC # SA2279SW	Page Aircraft
Cessna 190 and 195 Series	STC # SA1809SW	Page Aircraft

7555-1 (24 Volt)

Grumman G-164	STC # SA2015WE	PMA Issued
Cessna A188-Series	STC# SA2279SW	Page Aircraft
Rockwell Commander S-2R	OEM TD 3012	PMA Issued
Bell 47G and G2	STC # SH191WE	PMA Issued
Bell 47G-2, 3, 4, 5	STC # SH193WE	PMA Issued
Bell 47J and K	STC # SH194WE	PMA Issued
Cont. Copters Tom Cat	STC # SH2303SW	Cont. Copters
DeHavilland DHC-2 Beaver	STC# SA348NW	Kenmore Air Harbor

7565-1 (24 Volt)

Emair MA-1B Paymaster	STC # A6PC	Emair

6565-1 (12 Volt)

Helio H295, H391, H395	STC # SA987SO	Jungle Aviation

7650-1 (24 Volt)

Beech B95A	STC # SA4438NM	PMA Issued

7150T-300-1 (24 volt)

Hughes / Schwiezer Helicopters 269A-1, 269B, 269C	STC # SH1839NM	PMA Issued

6550T-PA24 (12 Volt)

Piper PA24 180 Commanche	STC # SA4582SW	PMA Issued

6650T-PA30 (12 Volt)

Piper PA30, A, B	STC # SA4362WE	PMA Issued

227 Oregon St. P.O.Box 807 El Segundo, CA 90245
Tel: (310)322-6284 (800)421-6846 US/Canada Fax:(310)322-6160

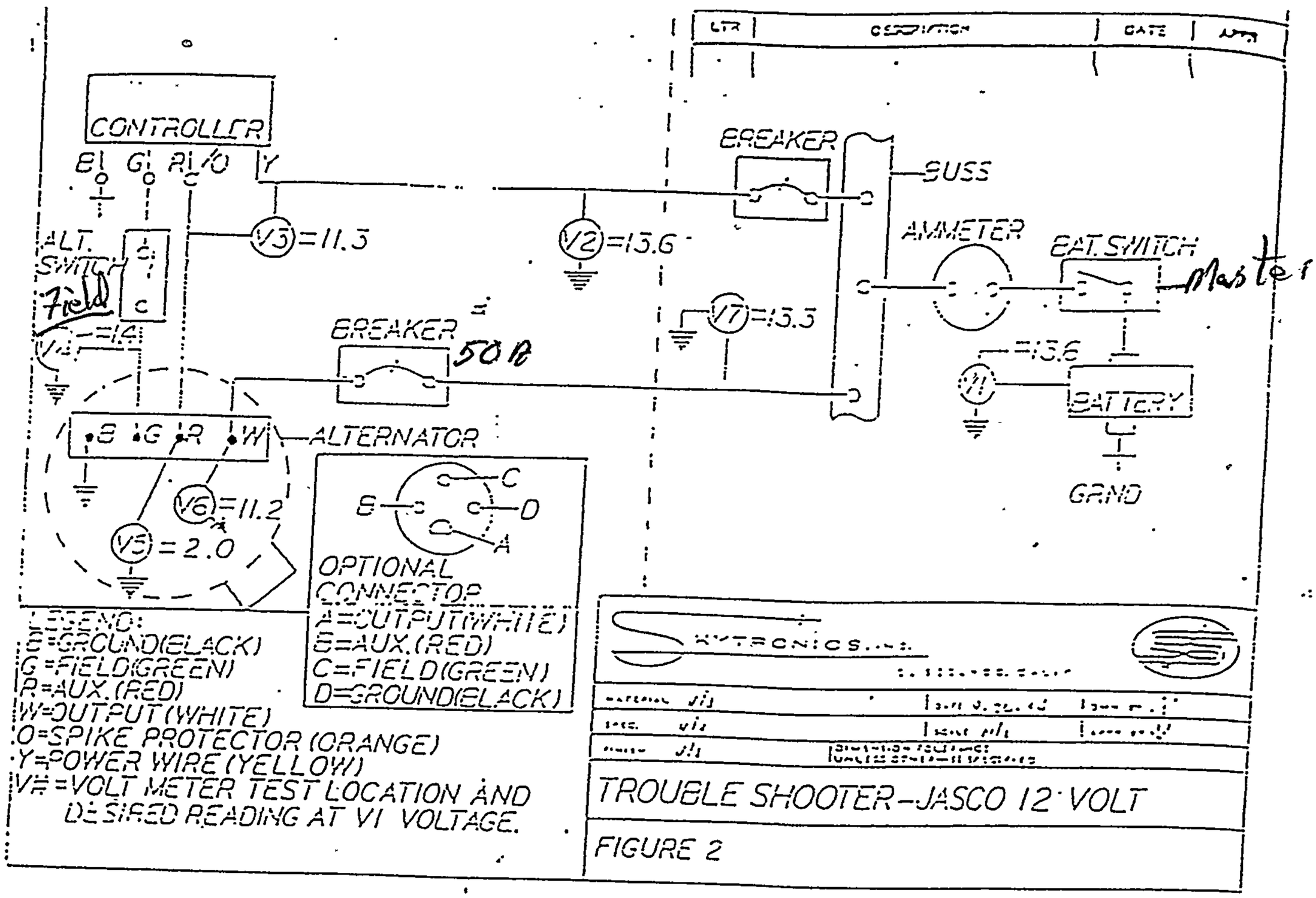

FIGURE 2

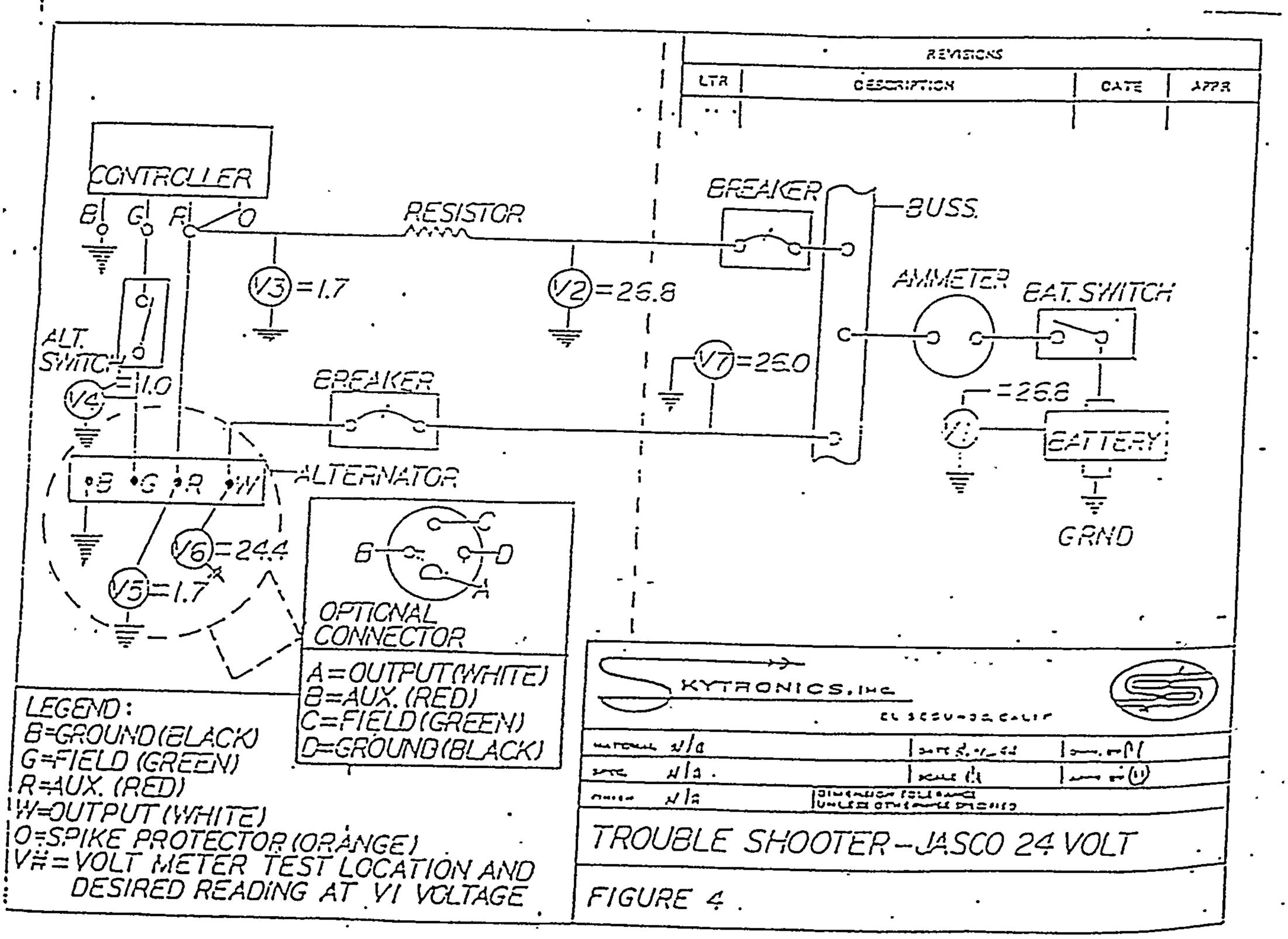

FIGURE 4

SKYTRONICS
INCORPORATED

Maintenance Instructions for the Jasco Alternator System

Compared to the best generator, the Jasco Alternator is lighter, more reliable, delivers more power, and requires less maintenance. In addition, you can extend the life of your Jasco charging system by following these basic maintenance instructions.

1. Inspect ram air inlet for obstructions prior to flight as part of your walk around.

2. Remove gear driven alternators every 250 hours and inspect rubber drive gear bushings for alignment, wear, or deformity. If damage is discovered, these inexpensive parts can be purchased from Skytronics to extend the life of your charging system.

3. Minor adjustment of system charging and voltage can be accomplished by adjusting the regulator variable resistor, located under the white protective cap on your Jasco Regulator. The variable resistor is very sensitive and requires only slight adjustment to bring system voltage to required levels. Your Jasco charging system is factory set, and should require no adjustment out of the box.

4. For abnormal operation including blown circuit breakers, failed fuses, erratic charging, no output or over voltage problems, contact the Skytronics, Inc. service department at 1-800-421-6846. We offer FREE factory evaluation including bench check of both alternator and regulator. In addition, our factory repair of your Jasco charging system carries the same warranty as a new system. Skytronics, Inc. is the only factory authorized repair station for your Jasco charging system, accept no substitute for repair.

Trouble shooting and general information is available Monday through Friday, 7:00 a.m. to 4:30 p.m. Pacific Standard Time by calling 310-322-6284.

227 Oregon St. P.O.Box 807 El Segundo, CA 90245 FAA Repair Station AE3R368L
Tel: (310)322-6284 (800)421-6846 US/Canada Fax:(310)322-6160

JUL 24 1998

US Department of Transportation
Federal Aviation Administration

MAJOR REPAIR AND ALTERATION
(Airframe, Powerplant, Propeller, or Appliance)

Form Approved
OMB No. 2120-0020

For FAA Use Only

Office Identification
NE-FSDO-05

INSTRUCTIONS: Print or type all entries. See FAR 43.9, FAR 43 Appendix B, and AC 43.9-1 (or subsequent revision thereof) for instructions and disposition of this form. This report is required by law (49 U.S.C. 1421). Failure to report can result in a civil penalty not to exceed $1 000 for each such violation (Section 901 Federal Aviation Act of 1958).

1. Aircraft	Make: BEECH	Model: B-35
	Serial-No.: D2520	Nationality and Registration Mark: N8865A
2. Owner	Name *(As shown on registration certificate)*: AUSTIN CHARLES C	Address *(As shown on registration certificate)*: 38 WOODLAND DR NASHUA, NH 03060

3. For FAA Use Only

The data/alteration identified herein complies with the applicable airworthiness requirements and is approved for the above described aircraft, subject to conformity inspection by a person authorized in FAR Section 43.7.

ASI: Ted M Domin
Date: Principal Avionics Inspector NE-FSDO-05 7-27-98

4. Unit Identification / **5. Type**

Unit	Make	Model	Serial No.	Repair	Alteration
AIRFRAME	(As described in Item 1 above)				X
POWERPLANT					
PROPELLER					
APPLIANCE	Type / Manufacturer				

6. Conformity Statement

A. Agency's Name and Address	B. Kind of Agency	C. Certificate No
Craig Avionics 83 Airport Rd - PO Box 865 Concord, NH 03302	U.S. Certificated Mechanic Foreign Certificated Mechanic XX Certificated Repair Station Manufacturer	RS5R182N

D. I certify that the repair and/or alteration made to the unit(s) identified in item 4 above and described on the reverse or attachments hereto have been made in accordance with the requirements of Part 43 of the U.S. Federal Aviation Regulations and that the information furnished herein is true and correct to the best of my knowledge.

Date	Signature of Authorized Individual
July 23, 1998	

7. Approval for Return To Service

Pursuant to the authority given persons specified below, the unit identified in item 4 was inspected in the manner prescribed by the Administrator of the Federal Aviation Administration and is ☒ APPROVED ☐ REJECTED

By						
	FAA Flt Standards Inspector		Manufacturer		Inspection Authorization	Other *(Specify)*
	FAA Designee	X	Repair Station		Person Approved by Transport Canada Airworthiness Group	

Date of Approval or Rejection	Certificate or Designation No.	Signature of Authorized Individual
07/31/98	RS5R182N	

FAA Form 337 (2 88)

NOTICE

Weight and balance or operating limitation changes shall be entered in the appropriate aircraft record. An alteration must be compatible with all previous alterations to assure continued conformity with the applicable airworthiness requirements.

8 Description of Work Accomplished
(If more space is required, attach additional sheets. Identify with aircraft nationality and registration mark and date work completed.)

Removed M1A, 2010 coupler, CI-121SP antenna and installed GPS-60 and AN-146 antenna in space provided by Beech and per GPS-60 Installation Manual P/N GM454, Rev. B, Aug, 4, 1995. Maximum current draw does not exceed 80% of aircraft system capacity. All work performed in accordance with methods, techniques and practices contained in AC 43.13.1A:

Chapter 5, Section 1, Paragraphs 227-235
Chapter 7, Section 1, Paragraph 267
Chapter 11, Sections 2, 3, 5, 7
Chapter 13, Section 1, Paragraphs 659, 662
Chapter 15, Sections 1, 2, 3, 4, 5,6
Chapter 15, Sections 3, 4, 5

and I.A.W. AC 43.13.2A:

Chapters 1, 2, 3, 11

This GPS was installed as a stand alone system with no external hook-ups and conforms to the original STC# SA995NE issued Sept 15, 1994 and amended Aug 1, 1995. Panle was placarded "GPS NOT APPROVED FOR IFR". Ground tests of GPS have been made and have shown to meet accuracy requirements of FAA AC No. 20-138, dated 5/25/94 for VFR flight. Owner was provided with GPS 60 Reference Manual P/N GM-453, Rev. 1.2, 1995 and GPS-60 Pilot's Guide P/N GM-440, Rev. A, Nov 30, 1993.

----------END----------

☐ Additional Sheets Are Attached

☆U.S. GOVERNMENT PRINTING OFFICE. 1992-769-012/60157

US Department of Transportation
Federal Aviation Administration

MAJOR REPAIR AND ALTERATION
(Airframe, Powerplant, Propeller, or Appliance)

MAY 13 1996

Form Approved
OMB No. 2120-0020

For FAA Use Only

Office Identification NE-FSDO-05

INSTRUCTIONS: Print or type all entries. See FAR 43.9, FAR 43 Appendix B, and AC 43.9-1 (or subsequent revision thereof) for instructions and disposition of this form. This report is required by law (49 U.S.C. 1421). Failure to report can result in a civil penalty not to exceed $1,000 for each such violation (Section 901 Federal Aviation Act of 1958).

1. Aircraft	Make: BEECHCRAFT	Model: B-35
	Serial No.: D2520	Nationality and Registration Mark: N 8865 A
2. Owner	Name *(As shown on registration certificate)*: CHARLES C AUSTIN	Address *(As shown on registration certificate)*: 38 WOODLAND DR NASHUA, NH 03063

3. For FAA Use Only

4. Unit Identification / **5. Type**

Unit	Make	Model	Serial No.	Repair	Alteration
AIRFRAME	*(As described in Item 1 above)*			X	
POWERPLANT					
PROPELLER					
APPLIANCE	Type / Manufacturer				

6. Conformity Statement

A. Agency's Name and Address	B. Kind of Agency	C. Certificate No.
Chellis L. Matz 30141-128th St. Princeton, MN 55371	X U.S. Certificated Mechanic Foreign Certificated Mechanic Certificated Repair Station Manufacturer	474407343

D. I certify that the repair and/or alteration made to the unit(s) identified in item 4 above and described on the reverse or attachments hereto have been made in accordance with the requirements of Part 43 of the U.S. Federal Aviation Regulations and that the information furnished herein is true and correct to the best of my knowledge.

Date	Signature of Authorized Individual
2-12-96	Chellis L. Matz

7. Approval for Return To Service

Pursuant to the authority given persons specified below, the unit identified in item 4 was inspected in the manner prescribed by the Administrator of the Federal Aviation Administration and is ☒ APPROVED ☐ REJECTED

BY							Other *(Specify)*
		FAA Flt. Standards Inspector		Manufacturer	X	Inspection Authorization	
		FAA Designee		Repair Station		Person Approved by Transport Canada Airworthiness Group	

Date of Approval or Rejection	Certificate or Designation No.	Signature of Authorized Individual
2-12-96	474407343 IA	Chellis L. Matz

FAA Form 337 (12-88)

NOTICE

Weight and balance or operating limitation changes shall be entered in the appropriate aircraft record. An alteration must be compatible with all previous alterations to assure continued conformity with the applicable airworthiness requirements.

8. Description of Work Accomplished

(If more space is required, attach additional sheets. Identify with aircraft nationality and registration mark and date work completed.)

Repaired left ruddervator by reskinning with new /Raytheon Beech factory parts;
Left skin #35-660040-12
Trim tab hinge #35-660040-14
Center rib #45-610005-16
All work done in accordance with AC 43.13 1A chapter 2 section 3.
Left ruddervator balanced per Beech shop manual to 17.5 pound inches.
Installing agency to complete blocks 1 and 2.

----------END----------

☐ Additional Sheets Are Attached

*U.S.GPO:1994-568-012/00019

FAA AIRCRAFT REGISTRY
CAMERA NO. 2N DATE: 12-7-94

US Department of Transportation
Federal Aviation Administration

MAJOR REPAIR AND ALTERATION
(Airframe, Powerplant, Propeller, or Appliance)

Form Approved
OMB No. 2120-0020

For FAA Use Only

Office Identification
NE-FSDO-05

INSTRUCTIONS: Print or type all entries. See FAR 43.9, FAR 43 Appendix B, and AC 43.9-1 (or subsequent revision thereof) for instructions and disposition of this form. This report is required by law (49 U.S.C. 1421). Failure to report can result in a civil penalty not to exceed $1,000 for each such violation (Section 901 Federal Aviation Act of 1958).

1. Aircraft	Make: BEECHCRAFT	Model: B-35
	Serial No.: D2520	Nationality and Registration Mark: N 8865A
2. Owner	Name (*As shown on registration certificate*): AUSTIN CHARLES C	Address (*As shown on registration certificate*): 38 WOODLAND DRIVE NASHUA NH 03060

3. For FAA Use Only

4. Unit Identification				5. Type	
Unit	Make	Model	Serial No.	Repair	Alteration
AIRFRAME	(*As described in Item 1 above*)				X
POWERPLANT					
PROPELLER					
APPLIANCE	Type / Manufacturer				

6. Conformity Statement

A. Agency's Name and Address	B. Kind of Agency		C. Certificate No.
Craig Avionics Concord Municipal Airport 83 Airport Rd - PO Box 855 Concord, NH 03301		U.S. Certificated Mechanic	RS5R182N
		Foreign Certificated Mechanic	
	X	Certificated Repair Station	
		Manufacturer	

D. I certify that the repair and/or alteration made to the unit(s) identified in item 4 above and described on the reverse or attachments hereto have been made in accordance with the requirements of Part 43 of the U.S. Federal Aviation Regulations and that the information furnished herein is true and correct to the best of my knowledge.

Date	Signature of Authorized Individual
Sept 1, 1994	Craig R. Parrott

7. Approval for Return To Service

Pursuant to the authority given persons specified below, the unit identified in Item 4 was inspected in the manner prescribed by the Administrator of the Federal Aviation Administration and is ☒ APPROVED ☐ REJECTED

BY						
		FAA Flt. Standards Inspector		Manufacturer	Inspection Authorization	Other (*Specify*)
		FAA Designee	X	Repair Station	Person Approved by Transport Canada Airworthiness Group	

Date of Approval or Rejection	Certificate or Designation No.	Signature of Authorized Individual
Sept 1, 1994	RS5R182N	Craig R. Parrott

FAA Form 337 (12-88)

FAA AIRCRAFT REGISTRY
CAMERA NO. 2N DATE: 12-7-94

NOTICE

Weight and balance or operating limitation changes shall be entered in the appropriate aircraft record. An alteration must be compatible with all previous alterations to assure continued conformity with the applicable airworthiness requirements.

8. Description of Work Accomplished
(If more space is required, attach additional sheets. Identify with aircraft nationality and registration mark and date work completed.)

Removed Kollsman encoding altimeter and 254-92 slaved DG. Installed United 5934P-3 baro altimeter, T.C.I. SSD120-30 encoder and Sigma Tek 4000B-8 DG in space provided by Beech and per manufacturer's individual manuals. Maximum current draw does not exceed 80% of aircraft system capacity. All work performed in accordance with methods, techniques and practices contained in AC 43.13.1A:

Chapter 5, Section 1, Paragraphs 227-235
Chapter 7, Section 1, Paragraph 267
Chapter 11, Sections 2, 3, 5, 7
Chapter 13, Section 1, Paragraphs 659, 662
Chapter 15, Sections 1, 2, 3, 4, 5, 6
Chapter 16, Sections 3, 4, 5

and I.A.W. AC 43.13.2A:

Chapters 1, 2, 3, 11

Aircraft system has been tested and inspected as per FAR 91.413 complete. Aircraft equipment list and weight and balance have been revised to show installation.

----------END----------

☐ Additional Sheets Are Attached

★U.S.GPO:1989-0-663-171

FAA AIRCRAFT REGISTRY
CAMERA NO. 2N DATE: 7-16-82

U. S. DEPARTMENT OF COMMERCE
CIVIL AERONAUTICS ADMINISTRATION

APPLICATION FOR AIRWORTHINESS CERTIFICATE AND/OR ANNUAL INSPECTION OF AN AIRCRAFT

Form Approved. Budget Bureau No. 41-R041.5.

INSTRUCTIONS
Please print or type. Submit this form to the Civil Aeronautics Administration Aviation Safety Field Representative.

1. TYPE OF APPLICATION (*Check which*)

a. ☑ ORIGINAL ISSUANCE OF CERTIFICATE
b. ☐ ANNUAL INSPECTION FOR RENEWAL OF CERTIFICATE
c. ☐ AMENDMENT OR MODIFICATION OF CURRENT CERTIFICATE
d. ☐ RECERTIFICATION UNDER THE PROVISIONS OF CAR 8
e. ☐ MULTIPLE CERTIFICATE UNDER THE PROVISIONS OF CAR 8
f. ☐

2. AIRWORTHINESS CLASSIFICATION (*Check appropriate item(s)*)
It is requested that the Certificate of Airworthiness be issued to permit operation of the aircraft in the following airworthiness classification(s):

a. ☑ STANDARD (NORMAL, UTILITY, ACROBATIC, TRANSPORT CATEGORIES)
b. ☐ LIMITED (SEE CAR 9)
c. ☐ RESTRICTED (SEE CAR 8)
(*Check the restricted special purpose operation(s) to be conducted*)
☐ AGRICULTURAL AND PEST CONTROL
☐ AERIAL ADVERTISING
☐ AERIAL SURVEYING
☐ GLIDER TOWING
☐ PATROLLING
☐ FOREST AND WILDLIFE CONSERVATION
☐ WEATHER CONTROL
☐ OTHER
d. ☐ EXPERIMENTAL
(*Check the type of experimental operation(s) to be conducted*)
☐ RESEARCH AND DEVELOPMENT
☐ AMATEUR-BUILT
☐ DEMONSTRATION
☐ RACING
☐ EXHIBITION
☐ OTHER

3. AIRCRAFT IDENTIFICATION (*Complete all items*)

a. AIRCRAFT MAKE	b. AIRCRAFT MODEL	c. AIRCRAFT SERIAL NO.
BEECHCRAFT	B-35	D-2520

d. ENGINE MAKE	e. ENGINE MODEL
CONTINENTAL	E-185-8

4. AIRCRAFT REGISTRATION INFORMATION (*Complete all items*)

a. REGISTERED OWNER'S FULL NAME	b. PERMANENT MAILING ADDRESS	c. AIRCRAFT NATIONALITY AND REGISTRATION MARK
Milton Poultry Co. Inc.	Milton, DELAWARE	N-8865A

5. AIRCRAFT OWNER'S CERTIFICATION (*Check and complete appropriate item*)
I hereby certify that I ~~am~~ the registered owner (or his agent) of the aircraft identified in Item 3 above which is registered* with the Civil Aeronautics Administration as required by the Regulations of the Administrator, Part 501 or 502 and when operated displays the following evidence of registration:

a. ☑ CERTIFICATE OF REGISTRATION, FORM ACA-500 (PART A). DATE OF ISSUE Nov 15, 55
b. ☐ APPLICATION FOR REGISTRATION, FORM ACA-500 (PART B). FORM ACA-500, PART A, FORWARDED TO CAA AIRCRAFT RECORDS BRANCH, W-300 ON _____ (DATE)
c. ☐ DEALER'S REGISTRATION CERTIFICATE, FORM ACA-1707, DATED _____

*In order to be eligible for registration an aircraft must be owned by a citizen of the United States, as defined by Section 1 (13) of the Civil Aeronautics Act of 1938, as amended.

ATTACHMENTS (*Check which*)
☐ ACA-319
☐ ACA-337
☐ ACA-317
☐ WEIGHT AND BALANCE REPORT
☐ DATA, DRAWINGS, ETC.
☐ UNAPPROVED DEVIATION DATA

Earl F Potter
(SIGNATURE OF REGISTERED OWNER OR AUTHORIZED AGENT)

Nov 27, 56 (DATE) AGENT (TITLE)

16—60837-2

Form ACA-505 (11-51)

FAA AIRCRAFT REGISTRY
CAMERA NO. 2N DATE: 7-16-82

U. S. DEPARTMENT OF COMMERCE
CIVIL AERONAUTICS ADMINISTRATION

AIRCRAFT INSPECTION REPORT

(To be completed by a CAA representative or approved repair station)

The aircraft described in Item 3 on the reverse of this form has been inspected and found to conform to the following:
(Check and complete applicable items)

1. AIRCRAFT AND ENGINE CERTIFICATION BASIS
   - a. ☑ AIRCRAFT SPECIFICATION NO. A-777 THROUGH SHEET REVISION NO. 39
   - b. ☐ AIRCRAFT LISTING PAGE NO. _____
   - c. ☑ AIRWORTHINESS DIRECTIVE SUMMARY 1955 (YEAR) THROUGH CARD NO. 56-24
   - d. ☐ CIVIL AIR REGULATION PART 8 (MODIFIED TYPE CERTIFICATE)

2. AIRCRAFT AND ENGINE OPERATING RECORDS
   - a. ☐ AIRCRAFT NEW—NO PREVIOUS OPERATION OR MAINTENANCE HISTORY
   - b. ☑ COMPLIANCE WITH APPLICABLE AIRWORTHINESS DIRECTIVES RECORDED
   - c. ☑ AIRCRAFT RECORDS INDICATE THE AIRFRAME HAS BEEN OPERATED A TOTAL OF 583 HOURS
   - d. ☑ ENGINE RECORDS INDICATE THE FOLLOWING OPERATION:
     - SERIAL NO. 20874-D-0-8 TOTAL HOURS 583
     - SERIAL NO. _____ TOTAL HOURS _____
     - SERIAL NO. _____ TOTAL HOURS _____
     - SERIAL NO. _____ TOTAL HOURS _____

3. PREVIOUS INSPECTION RECORD (INSPECTION RECORDED ON FORM ACA-319)
   - a. LAST AIRWORTHINESS INSPECTION CONDUCTED _____ (DATE)
     - ☐ BY AIRCRAFT MANUFACTURER
     - ☐ BY APPROVED REPAIR STATION, CERTIFICATE NO. _____
     - ☐ BY MECHANIC, CERTIFICATE NO. _____
   - b. ☐ PERIODIC AIRCRAFT INSPECTION REPORT, FORM ACA-319, WAS RETURNED TO OWNER

4. AIRWORTHINESS DOCUMENTS ISSUED OR REVIEWED
   - a. ☐ OPERATION LIMITATIONS, FORM ACA-309, WAS ISSUED (COPY ATTACHED)
   - b. ☐ CURRENT OPERATION LIMITATIONS, FORM ACA-309, IS AVAILABLE IN AIRCRAFT
   - c. ☑ CURRENT APPROVED AIRPLANE FLIGHT MANUAL IS AVAILABLE IN AIRCRAFT
   - d. ☑ CURRENT WEIGHT AND BALANCE INFORMATION IS AVAILABLE IN AIRCRAFT
   - e. ☑ THIS INSPECTION HAS BEEN RECORDED IN THE AIRCRAFT RECORDS
   - f. ☑ CERTIFICATE OF AIRWORTHINESS, FORM ACA-1362, ISSUED TO EXPIRE INDEFINITE (DATE)
   - g. ☐ PREVIOUS FORM ACA-1362 WAS ISSUED TO EXPIRE _____ (DATE)
     BY _____ (NAME OF ISSUING REPRESENTATIVE) _____ (DESIGNATION NO.)

5. CAA APPROVED REPAIR STATION CERTIFICATION

   The aircraft described on the reverse has been inspected under the authority accorded certificated repair station No. _____ by CAR 52 and was found to be:
   - ☐ AIRWORTHY
   - ☐ UNAIRWORTHY

   _____ (REPAIR STATION AUTHORIZED SIGNATURE) _____ (DATE)

6. CAA REPRESENTATIVE CERTIFICATION

   I HAVE INSPECTED THE AIRCRAFT DESCRIBED ON THE REVERSE AND FOUND IT ☑ AIRWORTHY ☐ UNAIRWORTHY (*Check appropriate item*)

DESIGNEE'S SIGNATURE	DESIGNATION NO.	DATE	
AVIATION SAFETY AGENT'S SIGNATURE Henry G. Smith	CAA DESIGNATION NO. Reg. 1 NY ASDO 9	DATE 11/27/56	☐ ACCEPTED ☐ REINSPECTED ☐ SPOT CHECKED

☐ ATTACHMENT

FAA AIRCRAFT REGISTRY
CAMERA NO. 2N DATE: 7-16-82

DEPARTMENT OF TRANSPORTATION
FEDERAL AVIATION ADMINISTRATION

MAJOR REPAIR AND ALTERATION
(Airframe, Powerplant, Propeller, or Appliance)

Form Approved
Budget Bureau No. 04-R060.1

FOR FAA USE ONLY

OFFICE IDENTIFICATION
NE-GADO-15

INSTRUCTIONS: Print or type all entries. See FAR 43.9, FAR 43 Appendix B, and AC 43.9-1 (or subsequent revision thereof) for instructions and disposition of this form.

1. AIRCRAFT	MAKE BEECHCRAFT	MODEL B-35
	SERIAL NO. D-2520	NATIONALITY AND REGISTRATION MARK U.S. N8865A
2. OWNER	NAME (As shown on registration certificate) CHARLES C. AUSTIN	ADDRESS (As shown on registration certificate) 38 WOODLAND DRIVE NASHUA, N.H. 03060

3. FOR FAA USE ONLY

4. UNIT IDENTIFICATION / 5. TYPE

UNIT	MAKE	MODEL	SERIAL NO.	REPAIR	ALTERATION
AIRFRAME	(As described in item 1 above)				✓
POWERPLANT					
PROPELLER					
APPLIANCE	TYPE / MANUFACTURER				

6. CONFORMITY STATEMENT

A. AGENCY'S NAME AND ADDRESS	B. KIND OF AGENCY	C. CERTIFICATE NO.
BRIAN H. WARREN P.O. BOX 301 DANVERS, MA. 01923	✓ U.S. CERTIFICATED MECHANIC FOREIGN CERTIFICATED MECHANIC CERTIFICATED REPAIR STATION MANUFACTURER	A+P 2098109

D. I certify that the repair and/or alteration made to the unit(s) identified in item 4 above and described on the reverse or attachments hereto have been made in accordance with the requirements of Part 43 of the U.S. Federal Aviation Regulations and that the information furnished herein is true and correct to the best of my knowledge.

DATE 12/19/75

SIGNATURE OF AUTHORIZED INDIVIDUAL Brian H Warren

7. APPROVAL FOR RETURN TO SERVICE

Pursuant to the authority given persons specified below, the unit identified in item 4 was inspected in the manner prescribed by the Administrator of the Federal Aviation Administration and is ☑ APPROVED ☐ REJECTED

BY						OTHER (Specify)
	✓	FAA FLT. STANDARDS INSPECTOR		MANUFACTURER		INSPECTION AUTHORIZATION
		FAA DESIGNEE		REPAIR STATION		CANADIAN DEPARTMENT OF TRANSPORT INSPECTOR OF AIRCRAFT

DATE OF APPROVAL OR REJECTION	CERTIFICATE OR DESIGNATION NO.	SIGNATURE OF AUTHORIZED INDIVIDUAL
12/19/75	A+P 2098109 I.A.	Brian H Warren

(8320)

FAA Form 337 (7-67)

GPO : 1972 O - 475-509

FAA AIRCRAFT REGISTRY
CAMERA NO. 2N DATE: 7-16-82

NOTICE

Weight and balance or operating limitation changes shall be entered in the appropriate aircraft record. An alteration must be compatible with all previous alterations to assure continued conformity with the applicable airworthiness requirements.

8. DESCRIPTION OF WORK ACCOMPLISHED (If more space is required, attach additional sheets. Identify with aircraft nationality and registration mark and date work completed.)

INSTALLED BERYL D'SHANNON FILTRATOR INSTALLATION KIT # KB-1019M IN ACCORDANCE WITH SUPPLEMENTAL TYPE CERTIFICATE #SA265WE AND ATTACHED MASTER ELIGIBILITY LIST # MEL-1014 DATED FEBRUARY 14, 1975.

END — END — END

☐ ADDITIONAL SHEETS ARE ATTACHED

FAA AIRCRAFT REGISTRY
CAMERA NO. 2N DATE: 7-16-82

DEPARTMENT OF TRANSPORTATION
FEDERAL AVIATION ADMINISTRATION

MAJOR REPAIR AND ALTERATION
(Airframe, Powerplant, Propeller, or Appliance)

Form Approved
Budget Bureau No. 04-R060.1

FOR FAA USE ONLY
OFFICE IDENTIFICATION

INSTRUCTIONS: Print or type all entries. See FAR 43.9, FAR 43 Appendix B, and AC 43.9-1 (or subsequent revision thereof) for instructions and disposition of this form.

1. AIRCRAFT	MAKE: Beech	MODEL: B-35
	SERIAL NO.: D2520	NATIONALITY AND REGISTRATION MARK: N8865A
2. OWNER	NAME (As shown on registration certificate): Harry T. Liming	ADDRESS (As shown on registration certificate): 59 Lievins Street, Rutherford, N.J. 07070

3. FOR FAA USE ONLY

4. UNIT IDENTIFICATION				5. TYPE	
UNIT	MAKE	MODEL	SERIAL NO.	REPAIR	ALTERATION
AIRFRAME	(As described in Item 1 above)				X
POWERPLANT					
PROPELLER					
APPLIANCE	TYPE / MANUFACTURER				

6. CONFORMITY STATEMENT

A. AGENCY'S NAME AND ADDRESS	B. KIND OF AGENCY	C. CERTIFICATE NO.
American Aircraft Service, Inc. 171 Passaic Avenue Fairfield, N.J. Leonard J. Schaustal	X U.S. CERTIFICATED MECHANIC FOREIGN CERTIFICATED MECHANIC CERTIFICATED REPAIR STATION MANUFACTURER	1428558

D. I certify that the repair and/or alteration made to the unit(s) identified in item 4 above and described on the reverse or attachments hereto have been made in accordance with the requirements of Part 43 of the U.S. Federal Aviation Regulations and that the information furnished herein is true and correct to the best of my knowledge.

DATE	SIGNATURE OF AUTHORIZED INDIVIDUAL
April 26, 1974	Leonard J. Schaustal

7. APPROVAL FOR RETURN TO SERVICE

Pursuant to the authority given persons specified below, the unit identified in item 4 was inspected in the manner prescribed by the Administrator of the Federal Aviation Administration and is [X] APPROVED [ ] REJECTED

BY						
	FAA FLT. STANDARDS INSPECTOR	MANUFACTURER	X	INSPECTION AUTHORIZATION	OTHER (Specify)
	FAA DESIGNEE	REPAIR STATION		CANADIAN DEPARTMENT OF TRANSPORT INSPECTOR OF AIRCRAFT	

DATE OF APPROVAL OR REJECTION	CERTIFICATE OR DESIGNATION NO.	SIGNATURE OF AUTHORIZED INDIVIDUAL
April 26, 1974	1428558	Leonard J. Schaustal

FAA Form 337 (7-67) (8320)

FAA AIRCRAFT REGISTRY
CAMERA NO. 82N DATE: 7-16-82

NOTICE

Weight and balance or operating limitation changes shall be entered in the appropriate aircraft record. An alteration must be compatible with all previous alterations to assure continued conformity with the applicable airworthiness requirements.

8. DESCRIPTION OF WORK ACCOMPLISHED *(If more space is required, attach additional sheets. Identify with aircraft nationality and registration mark and date work completed.)*

Installed EBC 302UR S/N 14989; With mounting bracket at station 106.5 aft of Pilots seat. This unit is a portable unit. Bracket installed as per AC 43-13-2 Chapter 2. No Wt & Bal Change. Log Book entry made. END

☐ ADDITIONAL SHEETS ARE ATTACHED

C FAA AC 72-0157

FAA AIRCRAFT REGISTRY
CAMERA NO. 2N DATE: 7-16-82

R.H.

DEPARTMENT OF TRANSPORTATION
FEDERAL AVIATION ADMINISTRATION

MAJOR REPAIR AND ALTERATION
(Airframe, Powerplant, Propeller, or Appliance)

Form Approved
Budget Bureau No. 04-R060.1

FOR FAA USE ONLY

OFFICE IDENTIFICATION
NE-GAD0-13

INSTRUCTIONS: Print or type all entries. See FAR 43.9, FAR 43 Appendix B, and AC 43.9-1 (or subsequent revision thereof) for instructions and disposition of this form.

1. AIRCRAFT	MAKE: BEECH	MODEL: B-35
	SERIAL NO.: D-2520	NATIONALITY AND REGISTRATION MARK: N8865A
2. OWNER	NAME (As shown on registration certificate): CHARLES C. AUSTIN	ADDRESS (As shown on registration certificate): 38 WOODLAND DRIVE NASHUA, N.H. 03060

3. FOR FAA USE ONLY

4. UNIT IDENTIFICATION / 5. TYPE

UNIT	MAKE	MODEL	SERIAL NO.	REPAIR	ALTERATION
AIRFRAME	(As described in item 1 above)				
POWERPLANT					
PROPELLER					
APPLIANCE	TYPE: Aileron MANUFACTURER: Beech	35 Series	4009-7A	X	

6. CONFORMITY STATEMENT

A. AGENCY'S NAME AND ADDRESS	B. KIND OF AGENCY	C. CERTIFICATE NO.
R. G. Brown, Jr. Aircraft & Engine Enterprises, Inc. Box 6070 Moore, Oklahoma 73160	X U.S. CERTIFICATED MECHANIC FOREIGN CERTIFICATED MECHANIC CERTIFICATED REPAIR STATION MANUFACTURER	A & P 217140

D. I certify that the repair and/or alteration made to the unit(s) identified in item 4 above and described on the reverse or attachments hereto have been made in accordance with the requirements of Part 43 of the U.S. Federal Aviation Regulations and that the information furnished herein is true and correct to the best of my knowledge.

DATE	SIGNATURE OF AUTHORIZED INDIVIDUAL
6-25-75	R. G. Brown, Jr.

7. APPROVAL FOR RETURN TO SERVICE

Pursuant to the authority given persons specified below, the unit identified in item 4 was inspected in the manner prescribed by the Administrator of the Federal Aviation Administration and is [X] APPROVED [ ] REJECTED

BY						OTHER (Specify)
		FAA FLT. STANDARDS INSPECTOR	MANUFACTURER	X	INSPECTION AUTHORIZATION	
		FAA DESIGNEE	REPAIR STATION		CANADIAN DEPARTMENT OF TRANSPORT INSPECTOR OF AIRCRAFT	

DATE OF APPROVAL OR REJECTION	CERTIFICATE OR DESIGNATION NO.	SIGNATURE OF AUTHORIZED INDIVIDUAL
6-25-75	217140	R. G. Brown, Jr.

(8320)

FAA Form 337 (7-67)

FAA AIRCRAFT REGISTRY
CAMERA NO. 2N DATE: 7-16-82

NOTICE

Weight and balance or operating limitation changes shall be entered in the appropriate aircraft record. An alteration must be compatible with all previous alterations to assure continued conformity with the applicable airworthiness requirements.

8. DESCRIPTION OF WORK ACCOMPLISHED *(If more space is required, attach additional sheets. Identify with aircraft nationality and registration mark and date work completed.)*

Aileron completely disassembled and inspected. All interior parts cleaned and painted. Installed new 33-130000-3 outer skin. Balanced. All workmanship and techniques meet the requirements of Beech maintenance manuals and AC43.13-1A

The above for repairs to aileron and not installation

JULY 11, 1975
THIS AILERON PAINTED TO MATCH AIRCRAFT.
BALANCE CHECKED AND REBALANCED IN ACCORDANCE WITH BEECH SHOP MANUAL 35-590088-5B6 PAGE 310.
AILERON INSTALLED ON RIGHT HAND SIDE OF BEECH B-35 S/N D-2520 AND RIGGED AS PER SHOP MANUAL.

JOSEPH MURPHY A&P 31403135

Joseph Murphy

☐ ADDITIONAL SHEETS ARE ATTACHED

FAA AIRCRAFT REGISTRY
CAMERA NO. 2N DATE: 7-16-82

DEPARTMENT OF TRANSPORTATION
FEDERAL AVIATION ADMINISTRATION

MAJOR REPAIR AND ALTERATION
(Airframe, Powerplant, Propeller, or Appliance)

Form Approved
Budget Bureau No. 04-R060.1

FOR FAA USE ONLY

OFFICE IDENTIFICATION
NE-GAD0-13

INSTRUCTIONS: Print or type all entries. See FAR 43.9, FAR 43 Appendix B, and AC 43.9-1 (or subsequent revision thereof) for instructions and disposition of this form.

1. AIRCRAFT	MAKE: BEECH	MODEL: B-35
	SERIAL NO.: D-2520	NATIONALITY AND REGISTRATION MARK: N8865A
2. OWNER	NAME (As shown on registration certificate): CHARLES C. AUSTIN	ADDRESS (As shown on registration certificate): 38 WOODLAND DRIVE NASHUA, N.H. 03060

3. FOR FAA USE ONLY

4. UNIT IDENTIFICATION				5. TYPE	
UNIT	MAKE	MODEL	SERIAL NO.	REPAIR	ALTERATION
AIRFRAME	(As described in item 1 above)				
POWERPLANT					
PROPELLER					
APPLIANCE	TYPE: Aileron MANUFACTURER: Beech	35 Series	4009-6A	X	

6. CONFORMITY STATEMENT

A. AGENCY'S NAME AND ADDRESS	B. KIND OF AGENCY	C. CERTIFICATE NO.
R. G. Brown, Jr. Aircraft & Engine Enterprises, Inc. Box 6070 Moore, Oklahoma 73160	X U.S. CERTIFICATED MECHANIC FOREIGN CERTIFICATED MECHANIC CERTIFICATED REPAIR STATION MANUFACTURER	A & P 217140

D. I certify that the repair and/or alteration made to the unit(s) identified in item 4 above and described on the reverse or attachments hereto have been made in accordance with the requirements of Part 43 of the U.S. Federal Aviation Regulations and that the information furnished herein is true and correct to the best of my knowledge.

DATE	SIGNATURE OF AUTHORIZED INDIVIDUAL
6-24-75	R. G. Brown, Jr.

7. APPROVAL FOR RETURN TO SERVICE

Pursuant to the authority given persons specified below, the unit identified in item 4 was inspected in the manner prescribed by the Administrator of the Federal Aviation Administration and is [X] APPROVED [ ] REJECTED

BY							OTHER (Specify)
		FAA FLT. STANDARDS INSPECTOR		MANUFACTURER	X	INSPECTION AUTHORIZATION	
		FAA DESIGNEE		REPAIR STATION		CANADIAN DEPARTMENT OF TRANSPORT INSPECTOR OF AIRCRAFT	

DATE OF APPROVAL OR REJECTION	CERTIFICATE OR DESIGNATION NO.	SIGNATURE OF AUTHORIZED INDIVIDUAL
6-24-75	217140	R. G. Brown, Jr.

FAA Form 337 (7-67) (8320)

FAA AIRCRAFT REGISTRY
CAMERA NO. 2N DATE: 7-16-82

NOTICE

Weight and balance or operating limitation changes shall be entered in the appropriate aircraft record. An alteration must be compatible with all previous alterations to assure continued conformity with the applicable airworthiness requirements.

8. DESCRIPTION OF WORK ACCOMPLISHED *(If more space is required, attach additional sheets. Identify with aircraft nationality and registration mark and date work completed.)*

Aileron completely disassembled and inspected. All interior parts cleaned and painted. Installed new 33-130000-3 outer skin. Balanced. All workmanship and techniques meet the requirements of Beech maintenance manuals and AC 43.13-1A

The above covers repair to aileron and not installation.

JULY 11, 1975
THIS AILERON PAINTED TO MATCH AIRCRAFT. BALANCE CHECKED AND REBALANCED IN ACCORDANCE WITH BEECH SHOP MANUAL 35-590088-5B6 PAGE 310. AILERON INSTALLED ON LEFT HAND SIDE OF BEECH A-35 S/N D-2520 AND RIGGED AS PER SHOP MANUAL.
JOSEPH MURPHY A&P 31403135
Joseph Murphy

☐ ADDITIONAL SHEETS ARE ATTACHED

U.S. GOVERNMENT PRINTING OFFICE : 1967 OF—272-[illegible]

FAA AIRCRAFT REGISTRY
CAMERA NO. 2N DATE: 7-16-82

DEPARTMENT OF TRANSPORTATION
FEDERAL AVIATION ADMINISTRATION

MAJOR REPAIR AND ALTERATION
(Airframe, Powerplant, Propeller, or Appliance)

Form Approved
Budget Bureau No. 04-R060.1

FOR FAA USE ONLY

OFFICE IDENTIFICATION
NE-GADO-13

INSTRUCTIONS: Print or type all entries. See FAR 43.9, FAR 43 Appendix B, and AC 43.9-1 (or subsequent revision thereof) for instructions and disposition of this form.

1. AIRCRAFT	MAKE: BEECH	MODEL: B-35
	SERIAL NO.: D-2520	NATIONALITY AND REGISTRATION MARK: N8865A
2. OWNER	NAME (As shown on registration certificate): AUSTIN, CHARLES	ADDRESS (As shown on registration certificate): 38 WOODLAND DRIVE NASHUA, N.H. 03060

3. FOR FAA USE ONLY

4. UNIT IDENTIFICATION / 5. TYPE

UNIT	MAKE	MODEL	SERIAL NO.	REPAIR	ALTERATION
AIRFRAME	(As described in item 1 above)				X
POWERPLANT					
PROPELLER					
APPLIANCE	TYPE / MANUFACTURER				

6. CONFORMITY STATEMENT

A. AGENCY'S NAME AND ADDRESS	B. KIND OF AGENCY	C. CERTIFICATE NO.
FRED A. BARRACLOUGH P.O. BOX 301, DANVERS MASS. 01923	X U.S. CERTIFICATED MECHANIC; FOREIGN CERTIFICATED MECHANIC; CERTIFICATED REPAIR STATION; MANUFACTURER	A&P 1156923

D. I certify that the repair and/or alteration made to the unit(s) identified in item 4 above and described on the reverse or attachments hereto have been made in accordance with the requirements of Part 43 of the U.S. Federal Aviation Regulations and that the information furnished herein is true and correct to the best of my knowledge.

DATE	SIGNATURE OF AUTHORIZED INDIVIDUAL
MAY 15, 1975	Fred A. Barraclough

7. APPROVAL FOR RETURN TO SERVICE

Pursuant to the authority given persons specified below, the unit identified in item 4 was inspected in the manner prescribed by the Administrator of the Federal Aviation Administration and is [X] APPROVED [ ] REJECTED

BY							OTHER (Specify)
		FAA FLT. STANDARDS INSPECTOR		MANUFACTURER	X	INSPECTION AUTHORIZATION	
		FAA DESIGNEE		REPAIR STATION		CANADIAN DEPARTMENT OF TRANSPORT INSPECTOR OF AIRCRAFT	

DATE OF APPROVAL OR REJECTION	CERTIFICATE OR DESIGNATION NO.	SIGNATURE OF AUTHORIZED INDIVIDUAL
MAY 15, 1975	1156923	Fred A. Barraclough

FAA Form 337 (7-67) (8320)

FAA AIRCRAFT REGISTRY
CAMERA NO. 2N DATE: 7-16-82

NOTICE

Weight and balance or operating limitation changes shall be entered in the appropriate aircraft record. An alteration must be compatible with all previous alterations to assure continued conformity with the applicable airworthiness requirements.

8. DESCRIPTION OF WORK ACCOMPLISHED (*If more space is required, attach additional sheets. Identify with aircraft nationality and registration mark and date work completed.*)

INSTALL SINGLE-PIECE WINDSHIELD IN ACCORDANCE WITH BERYL SPECIALTIES FAA SEALED MASTER DRAWING LIST NO. 31032, SUPPLEMENTAL TYPE CERTIFICATE NO. SA593WE. ISSUED TO BERYL D'SHANNON AVIATION SPECIALTIES, INC., ROUTE #1, BOX 127D, LEESBURG, FLORIDA 32748. LAST ISSUED DATE APRIL 3, 1975.

END

☐ ADDITIONAL SHEETS ARE ATTACHED

U.S. GOVERNMENT PRINTING OFFICE : 1967 OF—272-065

FAA AIRCRAFT REGISTRY
CAMERA NO. 2N DATE: 7-16-82

FEDERAL AVIATION AGENCY

MAJOR REPAIR AND ALTERATION
(Airframe, Powerplant, Propeller, or Appliance)

Form Approved
Budget Bureau No. 04-R060.1

FOR FAA USE ONLY

OFFICE IDENTIFICATION

INSTRUCTIONS: Print or type all entries. See FAR 43.9, FAR 43 Appendix B, and AC 43.9-1 (or subsequent revision thereof) for instructions and disposition of this form.

1. AIRCRAFT	MAKE: BEECHCRAFT	MODEL: B-35
	SERIAL NO.: D-2520	NATIONALITY AND REGISTRATION MARK: USA N-8865-A
2. OWNER	NAME (As shown on registration certificate): Albert Schultz & Aug. Gross	ADDRESS (As shown on registration certificate): L820 Cathedral Rd. Huntingdon Valley Pa.

3. FOR FAA USE ONLY

4. UNIT IDENTIFICATION

UNIT	MAKE	MODEL	SERIAL NO.	5. TYPE: REPAIR	5. TYPE: ALTERATION
AIRFRAME	(As described in item 1 above)				X
POWERPLANT					
PROPELLER					
APPLIANCE	TYPE / MANUFACTURER				

6. CONFORMITY STATEMENT

A. AGENCY'S NAME AND ADDRESS	B. KIND OF AGENCY	C. CERTIFICATE NO.
Stephen Lipschultz 1721 Danforth St. Phila. Pa.	X U.S. CERTIFICATED MECHANIC FOREIGN CERTIFICATED MECHANIC CERTIFICATED REPAIR STATION MANUFACTURER	A&P 1635037

D. I certify that the repair and/or alteration made to the unit(s) identified in item 4 above and described on the reverse or attachments hereto have been made in accordance with the requirements of Part 43 of the U.S. Federal Aviation Regulations and that the information furnished herein is true and correct to the best of my knowledge.

DATE	SIGNATURE OF AUTHORIZED INDIVIDUAL
JUN 19 1968	Stephen Lipschultz

7. APPROVAL FOR RETURN TO SERVICE

Pursuant to the authority given persons specified below, the unit identified in item 4 was inspected in the manner prescribed by the Administrator of the Federal Aviation Agency and is [X] APPROVED [ ] REJECTED

BY						
	FAA FLT. STANDARDS INSPECTOR	MANUFACTURER	X	INSPECTION AUTHORIZATION	OTHER (Specify)
	FAA DESIGNEE	REPAIR STATION		CANADIAN DEPARTMENT OF TRANSPORT INSPECTOR OF AIRCRAFT	

DATE OF APPROVAL OR REJECTION	CERTIFICATE OR DESIGNATION NO.	SIGNATURE OF AUTHORIZED INDIVIDUAL
6/19/68	A1 171855	George Garafalo

FAA AIRCRAFT REGISTRY
CAMERA NO. 2N DATE: 7-16-82

CONVEYANCE FAA AIRCRAFT REGISTRY

NOTICE

Weight and balance or operating limitation changes shall be entered in the appropriate aircraft record. An alteration must be compatible with all previous alterations to assure continued conformity with the applicable airworthiness requirements.

8. DESCRIPTION OF WORK ACCOMPLISHED (*If more space is required, attach additional sheets. Identify with aircraft nationality and registration mark and date work completed.*)

INSTALLED NARCO UAT-1 TRANSPONDER:

Located control head under left side sub panel, in bracket fabricated of .032 24ST alum., secured with two 6/32 screws,and one 8/32 screw. Unit is secured to bracket with four 4/40 screws & loonuts.

MAin unit is retained on shock mount located on existing equipment tray,aft of baggage compartment. (station 164)

Antenna mounted on belly next to main unit using .032 24ST Alum. doubler and two 8/32 loonuts.

One 5 Amp. Cir. Brker. providing circuit protection, is located in thelower rt. side electrical sub panel.

Electrical load is 34.1 Amps.
Generator provides 50.0 Amps. (See 337 dated 6/1/68)

Compass rechecked with electrical equipment on.

Equipment list revised.

All work done in accord with AC 43.13-1 & AC 43.13-2 .

END

☐ ADDITIONAL SHEETS ARE ATTACHED

U.S. GOVERNMENT PRINTING OFFICE : 1965 OF—761-741

FAA AIRCRAFT REGISTRY
CAMERA NO. 2N DATE: 7-16-82

FEDERAL AVIATION AGENCY

MAJOR REPAIR AND ALTERATION
(Airframe, Powerplant, Propeller, or Appliance)

Form Approved
Budget Bureau No. 04-R060.1

FOR FAA USE ONLY

OFFICE IDENTIFICATION

INSTRUCTIONS: Print or type all entries. See FAR 43.9, FAR 43 Appendix B, and AC 43.9-1 (or subsequent revision thereof) for instructions and disposition of this form.

1. AIRCRAFT	MAKE: BEECHCRAFT	MODEL: B-35
	SERIAL NO.: D-2520	NATIONALITY AND REGISTRATION MARK: USA N-8865-A
2. OWNER	NAME (As shown on registration certificate): Albert Schultz & Aug. Gross	ADDRESS (As shown on registration certificate): 1820 Cathedral Rd Huntingdn Vly. PA.

3. FOR FAA USE ONLY

4. UNIT IDENTIFICATION

UNIT	MAKE	MODEL	SERIAL NO.	5. TYPE: REPAIR	5. TYPE: ALTERATION
AIRFRAME	(As described in item 1 above)				X
POWERPLANT					
PROPELLER					
APPLIANCE	TYPE / MANUFACTURER				

6. CONFORMITY STATEMENT

A. AGENCY'S NAME AND ADDRESS	B. KIND OF AGENCY	C. CERTIFICATE NO.
Steve Lipschultz 1721 Danforth St. Phila. Pa.	X U.S. CERTIFICATED MECHANIC FOREIGN CERTIFICATED MECHANIC CERTIFICATED REPAIR STATION MANUFACTURER	A&P 1635037

D. I certify that the repair and/or alteration made to the unit(s) identified in item 4 above and described on the reverse or attachments hereto have been made in accordance with the requirements of Part 43 of the U.S. Federal Aviation Regulations and that the information furnished herein is true and correct to the best of my knowledge.

DATE	SIGNATURE OF AUTHORIZED INDIVIDUAL
6-1-68	Steve Lipschultz

7. APPROVAL FOR RETURN TO SERVICE

Pursuant to the authority given persons specified below, the unit identified in item 4 was inspected in the manner prescribed by the Administrator of the Federal Aviation Agency and is [X] APPROVED [ ] REJECTED

BY						
		FAA FLT. STANDARDS INSPECTOR		MANUFACTURER	X INSPECTION AUTHORIZATION	OTHER (Specify)
		FAA DESIGNEE		REPAIR STATION	CANADIAN DEPARTMENT OF TRANSPORT INSPECTOR OF AIRCRAFT	

DATE OF APPROVAL OR REJECTION	CERTIFICATE OR DESIGNATION NO.	SIGNATURE OF AUTHORIZED INDIVIDUAL
6-1-68	A1-171855	George Garabedian

FAA Form 337 (1-65) OBSOLETE PREVIOUS EDITION 0052-025-8000 (8320)

FAA AIRCRAFT REGISTRY
CAMERA NO. 2N DATE: 7-16-82

CONVEYANCE NEED WITH
FAA AIRCRAFT REGISTRY

NOTICE

Weight and balance or operating limitation changes shall be entered in the appropriate aircraft record. An alteration must be compatible with all previous alterations to assure continued conformity with the applicable airworthiness requirements.

JUN 12 3 37 PM '00

OKLAHOMA CITY, OKLA.

8. DESCRIPTION OF WORK ACCOMPLISHED *(If more space is required, attach additional sheets. Identify with aircraft nationality and registration mark and date work completed.)*

Installed Beech 50 Amp. generator kit per Beech installation bulletin 1-7-57. Beech kit #35-621.

Electrical Load: Max. drain 30.6 Amps.

Removed load limit placard.

All work done in accordance with AC 43.13-1 & AC 43.13-2 .

Equipment list revised.

----------END***----------

☐ ADDITIONAL SHEETS ARE ATTACHED

S. GOVERNMENT PRINTING OFFICE : 1965 OF—761-748

FAA AIRCRAFT REGISTRY
CAMERA NO. 2N DATE: 7-16-82

12 1457 37 JUL 26 '67

FEDERAL AVIATION AGENCY

MAJOR REPAIR AND ALTERATION
(Airframe, Powerplant, Propeller, or Appliance)

Form Approved
Budget Bureau No. 04-R060.1

FOR FAA USE ONLY

OFFICE IDENTIFICATION

INSTRUCTIONS: Print or type all entries. See FAR 43.9, FAR 43 Appendix B, and AC 43.9-1 (or subsequent revision thereof) for instructions and disposition of this form.

1. AIRCRAFT	MAKE: BEECHCRAFT	MODEL: B-35
	SERIAL NO.: D-2520	NATIONALITY AND REGISTRATION MARK: USA N-8865-A
2. OWNER	NAME (As shown on registration certificate): Albert Schultz & Aug. Gross	ADDRESS (As shown on registration certificate): 1820 Cathedral Rd.Huntingdon Val

3. FOR FAA USE ONLY

4. UNIT IDENTIFICATION / 5. TYPE

UNIT	MAKE	MODEL	SERIAL NO.	REPAIR	ALTERATION
AIRFRAME	(As described in item 1 above)				X
POWERPLANT					
PROPELLER					
APPLIANCE	TYPE / MANUFACTURER				

6. CONFORMITY STATEMENT

A. AGENCY'S NAME AND ADDRESS	B. KIND OF AGENCY	C. CERTIFICATE NO.
Steve Lipschultz 1721 Danforth St Phila Pa	X U.S. CERTIFICATED MECHANIC FOREIGN CERTIFICATED MECHANIC CERTIFICATED REPAIR STATION MANUFACTURER	A&P 1635037

D. I certify that the repair and/or alteration made to the unit(s) identified in item 4 above and described on the reverse or attachments hereto have been made in accordance with the requirements of Part 43 of the U.S. Federal Aviation Regulations and that the information furnished herein is true and correct to the best of my knowledge.

DATE	SIGNATURE OF AUTHORIZED INDIVIDUAL
7-10-67	Steve Lipschultz

7. APPROVAL FOR RETURN TO SERVICE

Pursuant to the authority given persons specified below, the unit identified in item 4 was inspected in the manner prescribed by the Administrator of the Federal Aviation Agency and is ☒ APPROVED ☐ REJECTED

BY						OTHER (Specify)
		FAA FLT. STANDARDS INSPECTOR		MANUFACTURER	X INSPECTION AUTHORIZATION	Verified by Operator #7
		FAA DESIGNEE		REPAIR STATION	CANADIAN DEPARTMENT OF TRANSPORT INSPECTOR OF AIRCRAFT	

DATE OF APPROVAL OR REJECTION	CERTIFICATE OR DESIGNATION NO.	SIGNATURE OF AUTHORIZED INDIVIDUAL
7-10-67	AI-171855	George Garaldeau

FAA Form 337 (1-65) OBSOLETE PREVIOUS EDITION 0052-025-8000 (8320)

FAA AIRCRAFT REGISTRY
CAMERA NO. 2N DATE: 7-16-82

NOTICE

Weight and balance or operating limitation changes shall be entered in the appropriate aircraft record. An alteration must be compatible with all previous alterations to assure continued conformity with the applicable airworthiness requirements.

8. DESCRIPTION OF WORK ACCOMPLISHED *(If more space is required, attach additional sheets. Identify with aircraft nationality and registration mark and date work completed.)*

#1 Installed Beech fuel pump kit #35-567 per Beech installation bulletin 4-15-55.

#2 Removed Mk-5 radio, power supply, VOA-3 Indicator, converter & all cables.

#3 Removed Remote compass Indicator, inverter, transmitter.

#4 Relocated Mk-12 power supply from Instr. Acc. cover to existing mount aft of station 151.0 (Rear of baggage compartment).

#5 Installed Bendix M-450 Nav-Com system, Panel unit in panel mount vacated by Mk-5, power supply on Acc. cover, glide slope mounted on L.H. upper firewall using 4 ea. 6/32 screws, 2 ea. 6/32 nuts, 2 ea. 6/32 Rivnuts. Used existing Ant. & electrical connections.

Electrical load 30 Amps Max. drain. 30.6. 35 A. GEN. Item 301b
PLACARD: [redacted]
Do not use Rot.Beacon with all radios on.

Equipment list revised.
Compass rechecked with electrical equipment and radios on.
Deviation card corrected.

All work done in accordance with AC 43.13-1 & AC 43.13-2

-------END---------

☐ ADDITIONAL SHEETS ARE ATTACHED

FAA AIRCRAFT REGISTRY
CAMERA NO. 2N DATE: 7-16-82

1219-1029-37-MAY 1, '67 (EK)

FEDERAL AVIATION AGENCY

MAJOR REPAIR AND ALTERATION
(Airframe, Powerplant, Propeller, or Appliance)

Form Approved
Budget Bureau No. 04-R060.1

FOR FAA USE ONLY
OFFICE IDENTIFICATION 1-2-09
1-2-09

INSTRUCTIONS: Print or type all entries. See FAR 43.9, FAR 43 Appendix B, and AC 43.9-1 (or subsequent revision thereof) for instructions and disposition of this form.

1. AIRCRAFT	MAKE: BEECHCRAFT	MODEL: B-35
	SERIAL NO.: D 2520	NATIONALITY AND REGISTRATION MARK: USA N 8865-A
2. OWNER	NAME (As shown on registration certificate): Albert Schultz & Aug. G.Gross	ADDRESS (As shown on registration certificate): 1820 Cathedral Rd. Huntingdon Valley Pa.

3. FOR FAA USE ONLY

4. UNIT IDENTIFICATION / 5. TYPE

UNIT	MAKE	MODEL	SERIAL NO.	REPAIR	ALTERATION
AIRFRAME	(As described in item 1 above)			X	
POWERPLANT					
PROPELLER					
APPLIANCE	TYPE / MANUFACTURER				

6. CONFORMITY STATEMENT

A. AGENCY'S NAME AND ADDRESS	B. KIND OF AGENCY	C. CERTIFICATE NO.
Stephen I. Lipschultz 1721 Danforth St. Phila. Pa.	X U.S. CERTIFICATED MECHANIC FOREIGN CERTIFICATED MECHANIC CERTIFICATED REPAIR STATION MANUFACTURER	1635037

D. I certify that the repair and/or alteration made to the unit(s) identified in item 4 above and described on the reverse or attachments hereto have been made in accordance with the requirements of Part 43 of the U.S. Federal Aviation Regulations and that the information furnished herein is true and correct to the best of my knowledge.

DATE	SIGNATURE OF AUTHORIZED INDIVIDUAL
4-8-67	Stephen I. Lipschultz

7. APPROVAL FOR RETURN TO SERVICE

Pursuant to the authority given persons specified below, the unit identified in item 4 was inspected in the manner prescribed by the Administrator of the Federal Aviation Agency and is ☑ APPROVED ☐ REJECTED

BY						
	✓	FAA FLT. STANDARDS INSPECTOR	MANUFACTURER	INSPECTION AUTHORIZATION	OTHER (Specify) Verified by Operator #104
		FAA DESIGNEE	REPAIR STATION	CANADIAN DEPARTMENT OF TRANSPORT INSPECTOR OF AIRCRAFT	

DATE OF APPROVAL OR REJECTION	CERTIFICATE OR DESIGNATION NO.	SIGNATURE OF AUTHORIZED INDIVIDUAL
4-14-67	1-2-09	U. F. Dyle

FAA Form 337 (1-65) OBSOLETE PREVIOUS EDITION 0052-025-8000 (8320)

FAA AIRCRAFT REGISTRY
CAMERA NO. 2N DATE: 7-16-82

NOTICE

Weight and balance or operating limitation changes shall be entered in the appropriate aircraft record. An alteration must be compatible with all previous alterations to assure continued conformity with the applicable airworthiness requirements.

8. DESCRIPTION OF WORK ACCOMPLISHED *(If more space is required, attach additional sheets. Identify with aircraft nationality and registration mark and date work completed.)*

Beechcraft B-35 N 8865-A 4-8-67

Repaired front engine mount support:

Fabricated plate of .063 24 ST Aluminium & riveted to face of engine support part # 45-410385 using 5 each 4/32 rivets, 1 each 5/32 rivet. Plate was affixed to keel by picking up 4 each existing 5/32 rivets.

(See attached drawing.)
SK8865-410385 dtd 4-8-67.
Photo A706531.

APPROVED BY ENGINEERING

DER CATEGORY	DER SIGNATURE	DER NO.	DATE
STRUCTURAL	B J Salvador / B J Salvador	1-31	4-11-67
POWERPLANT		NA	
SYST. & EQUIP.		NA	
FLIGHT-PILOT		NA	
FLIGHT ANALYST		NA	

FINAL APPROVAL SUBJECT TO INSPECTION

☒ ADDITIONAL SHEETS ARE ATTACHED

COPY

U.S. GOVERNMENT PRINTING OFFICE : 1965 OF—761-748

REPAIR OF ENGINE SUPPORT PT. # 45-410385-9
B-35 BONANZA N-8865-A SER. D-2520
4-8-67

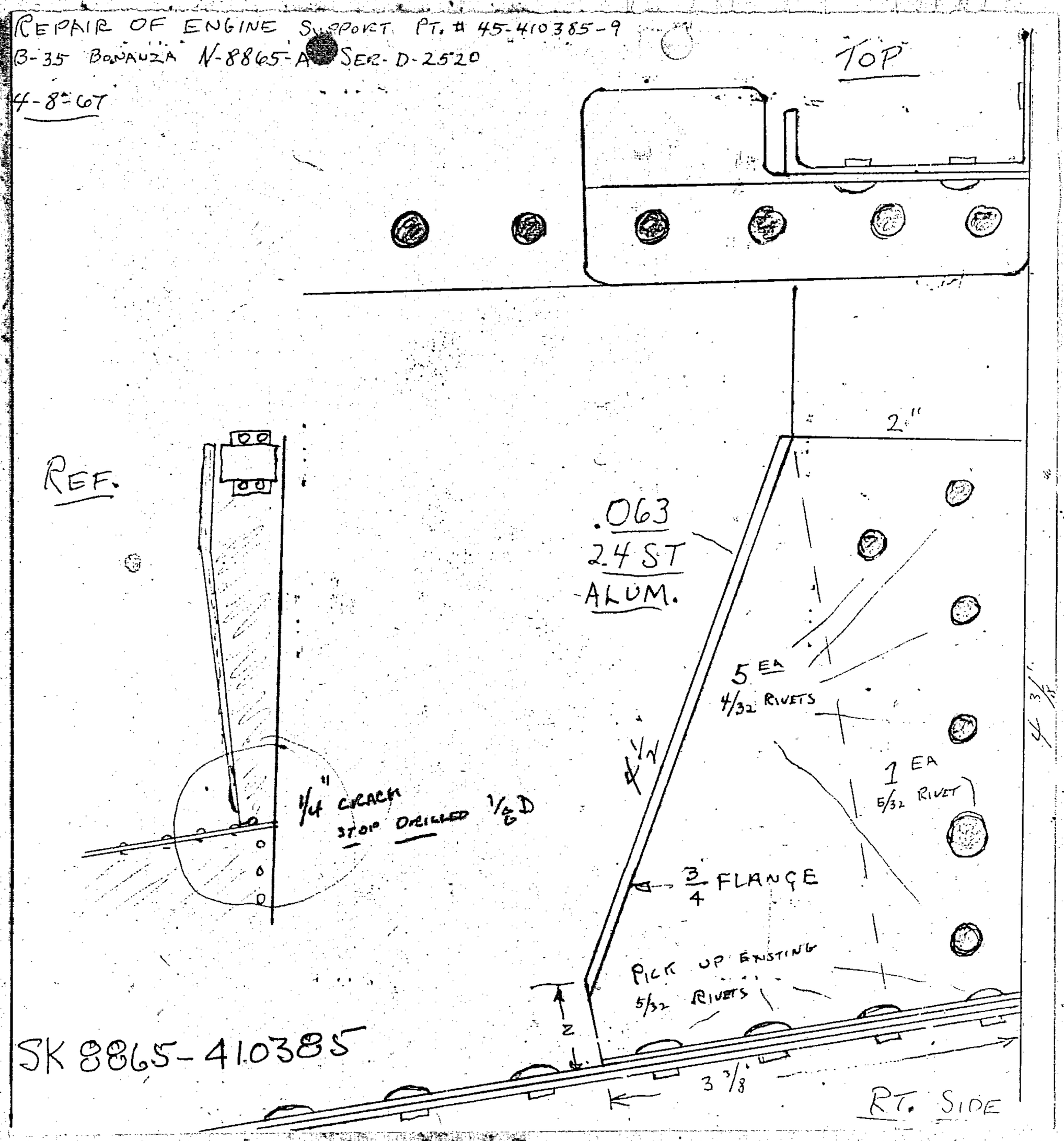

FAA AIRCRAFT REGISTRY
CAMERA NO. 2N DATE: 7-16-82

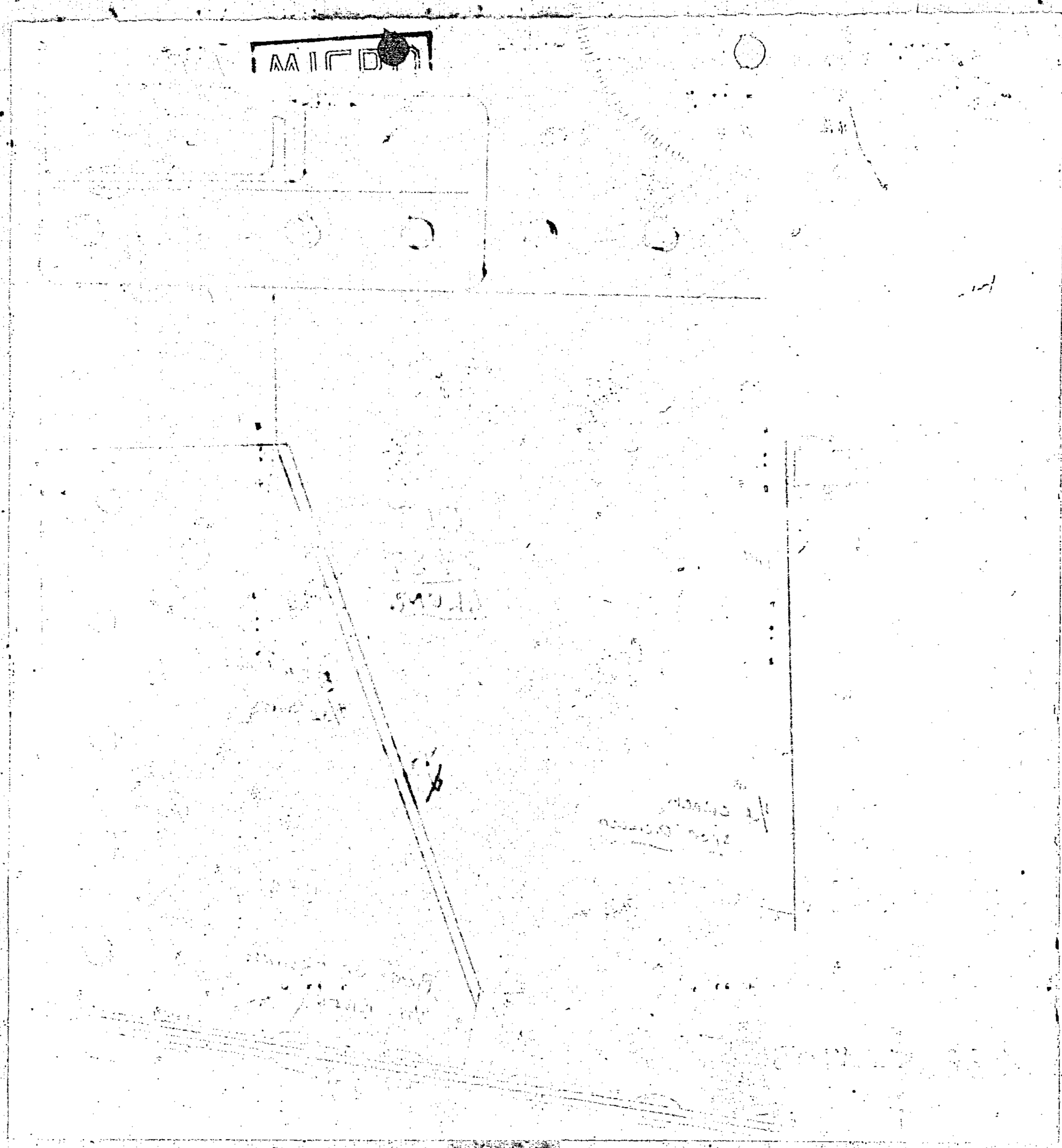

FAA AIRCRAFT REGISTRY
CAMERA NO. 2N DATE: 7-16-82

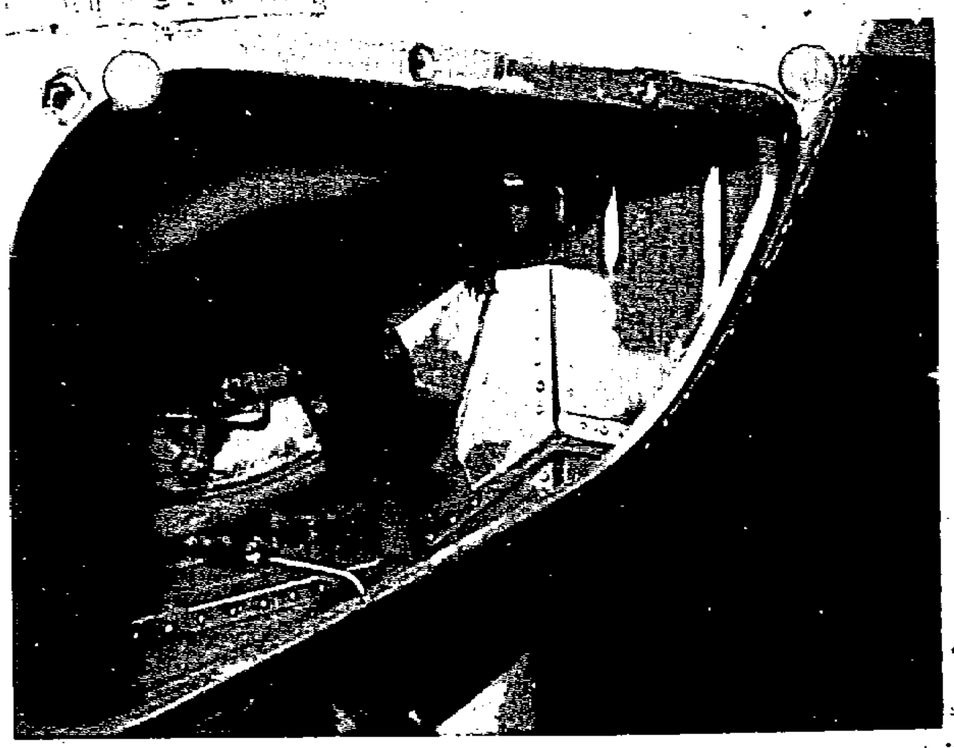

FAA AIRCRAFT REGISTRY
CAMERA NO. 2N DATE: 7-16-82

BEECHCRAFT N8865A
SER. NO. D2520

A20631

FAA AIRCRAFT REGISTRY
CAMERA NO. 2N DATE: 7-16-82

FAA AIRCRAFT REGISTRY
CAMERA NO. 2N DATE: 7-16-82

BEECHCRAFT N8865-A
SER. NO D2520

FAA AIRCRAFT REGISTRY
CAMERA NO. 2N DATE: 7-16-82

1173-0549 37 DEC 30 '66

FEDERAL AVIATION AGENCY

MAJOR REPAIR AND ALTERATION
(Airframe, Powerplant, Propeller, or Appliance)

Form Approved
Budget Bureau No. 04-R060.1

FOR FAA USE ONLY

OFFICE IDENTIFICATION
PNE GADO 1-2-09

INSTRUCTIONS: Print or type all entries. See FAR 43.9, FAR 43 Appendix B, and AC 43.9-1 (or subsequent revision thereof) for instructions and disposition of this form.

1. AIRCRAFT	MAKE: BEECHCRAFT	MODEL: B-35
	SERIAL NO.: D-2520	NATIONALITY AND REGISTRATION MARK: USA N-8865 -A
2. OWNER	NAME (As shown on registration certificate): Albert Schultz & Aug. Gross	ADDRESS (As shown on registration certificate): 1820 Cathedral Rd Huntingdon Vly PA.

3. FOR FAA USE ONLY

4. UNIT IDENTIFICATION / 5. TYPE

UNIT	MAKE	MODEL	SERIAL NO.	REPAIR	ALTERATION
AIRFRAME	(As described in item 1 above)				X
POWERPLANT					
PROPELLER					
APPLIANCE	TYPE / MANUFACTURER				

6. CONFORMITY STATEMENT

A. AGENCY'S NAME AND ADDRESS	B. KIND OF AGENCY	C. CERTIFICATE NO.
Steve Lipschultz 1721 Danforth St Phila	X U.S. CERTIFICATED MECHANIC FOREIGN CERTIFICATED MECHANIC CERTIFICATED REPAIR STATION MANUFACTURER	A+P 1635037

D. I certify that the repair and/or alteration made to the unit(s) identified in item 4 above and described on the reverse or attachments hereto have been made in accordance with the requirements of Part 43 of the U.S. Federal Aviation Regulations and that the information furnished herein is true and correct to the best of my knowledge.

DATE	SIGNATURE OF AUTHORIZED INDIVIDUAL
12-19-66	Stephen Lipschultz

7. APPROVAL FOR RETURN TO SERVICE

Pursuant to the authority given persons specified below, the unit identified in item 4 was inspected in the manner prescribed by the Administrator of the Federal Aviation Agency and is: ☒ APPROVED ☐ REJECTED

BY						OTHER (Specify)
		FAA FLT. STANDARDS INSPECTOR		MANUFACTURER	X INSPECTION AUTHORIZATION	Verified by Operator #15
		FAA DESIGNEE		REPAIR STATION	CANADIAN DEPARTMENT OF TRANSPORT INSPECTOR OF AIRCRAFT	

DATE OF APPROVAL OR REJECTION	CERTIFICATE OR DESIGNATION NO.	SIGNATURE OF AUTHORIZED INDIVIDUAL
12-19-66	AI 171855	George Garabedian

FAA Form 337 (1-65) OBSOLETE PREVIOUS EDITION 0052-025-8000 (8320)

FAA AIRCRAFT REGISTRY
CAMERA NO. 2N DATE: 7-16-82

NOTICE

Weight and balance or operating limitation changes shall be entered in the appropriate aircraft record. An alteration must be compatible with all previous alterations to assure continued conformity with the applicable airworthiness requirements.

8. DESCRIPTION OF WORK ACCOMPLISHED *(If more space is required, attach additional sheets. Identify with aircraft nationality and registration mark and date work completed.)*

INSTALLED BEECHCRAFT AIR VENT KIT #35-674-1
AS PER BEECH DRAWING # 35-001061

END

☐ ADDITIONAL SHEETS ARE ATTACHED

☆ U.S. GOVERNMENT PRINTING OFFICE : 1965 OF—761-748

FAA AIRCRAFT REGISTRY
CAMERA NO. 2N DATE: 7-16-82

Verified by Operator #7
Punched by Operator #79
1072-1302 37 MAY 27 '66

FEDERAL AVIATION AGENCY

MAJOR REPAIR AND ALTERATION
(Airframe, Powerplant, Propeller, or Appliance)

Form Approved
Budget Bureau No. 04-R060.1

FOR FAA USE ONLY
OFFICE IDENTIFICATION
EASTERN REGION CADO No.

INSTRUCTIONS: Print or type all entries. See FAR 43.9, FAR 43 Appendix B, and AC 43.9-1 (or subsequent revision thereof) for instructions and disposition of this form.

1. AIRCRAFT	MAKE: Beech	MODEL: B-35
	SERIAL NO.: D-2520	NATIONALITY AND REGISTRATION MARK: N8865A
2. OWNER	NAME (As shown on registration certificate): August Gross Jr. Albert Schultz	ADDRESS (As shown on registration certificate): 1820 Cathedral Rd. Huntington Valley, Penna.

3. FOR FAA USE ONLY

The data identified herein complied with applicable airworthiness requirements and is approved only for the above described aircraft subject to conformity inspection by a person authorized in FAR 43.7.

APPROVING INSPECTOR [signature]

DATE 4/15/66

Verified by Operator #45

4. UNIT IDENTIFICATION

UNIT	MAKE	MODEL	SERIAL NO.	5. TYPE: REPAIR	5. TYPE: ALTERATION
AIRFRAME	(As described in item 1 above)				X
POWERPLANT					
PROPELLER					
APPLIANCE	TYPE / MANUFACTURER				

6. CONFORMITY STATEMENT

A. AGENCY'S NAME AND ADDRESS	B. KIND OF AGENCY	C. CERTIFICATE NO.
Albert C. Lewis Box 133 R.F.D.#2 Williamstown, N.J.	X U.S. CERTIFICATED MECHANIC FOREIGN CERTIFICATED MECHANIC CERTIFICATED REPAIR STATION MANUFACTURER	1375004 A&P

D. I certify that the repair and/or alteration made to the unit(s) identified in item 4 above and described on the reverse or attachments hereto have been made in accordance with the requirements of Part 43 of the U.S. Federal Aviation Regulations and that the information furnished herein is true and correct to the best of my knowledge.

DATE 4-5-66

SIGNATURE OF AUTHORIZED INDIVIDUAL [signature]

7. APPROVAL FOR RETURN TO SERVICE

Pursuant to the authority given persons specified below, the unit identified in item 4 was inspected in the manner prescribed by the Administrator of the Federal Aviation Agency and is [X] APPROVED [ ] REJECTED

BY						OTHER (Specify)
	X	FAA FLT. STANDARDS INSPECTOR	MANUFACTURER	X	INSPECTION AUTHORIZATION	
		FAA DESIGNEE	REPAIR STATION		CANADIAN DEPARTMENT OF TRANSPORT INSPECTOR OF AIRCRAFT	

DATE OF APPROVAL OR REJECTION 4/15/66

CERTIFICATE OR DESIGNATION NO.

SIGNATURE OF AUTHORIZED INDIVIDUAL [signature]

FAA Form 337 (1-65) OBSOLETE PREVIOUS EDITION

0052-025-8000 (8320)

FAA AIRCRAFT REGISTRY
CAMERA NO. 2N DATE: 7-16-82

NOTICE

Weight and balance or operating limitation changes shall be entered in the appropriate aircraft record. An alteration must be compatible with all previous alterations to assure continued conformity with the applicable airworthiness requirements.

8. DESCRIPTION OF WORK ACCOMPLISHED *(If more space is required, attach additional sheets. Identify with aircraft nationality and registration mark and date work completed.)*

Removed Narco Simplexer VC-27 and power supply. Installed Narco Mark V in dash above Mark X11. Installed VoA-3 Converter and power supply on a bracket of o32 2024 ST3 alum secured to the stringers aft of baggage compartment. Installed remote indicating compass transmitter on another 032 alum bracket on opposite side of fuselage aft of baggage compartment. Compass inverter was secured to the floor fwd of the front seat at l/h side. VOA-3 indicator and compass indicator was mounted on instrument panel. KMA-1 Switch unit with 3 light Marker beacon was secured to the top center of instrument panel. 2 Broad band transmitter antennas was secured to the top of the fuselage with an 032 alum doubler approximatey 6 inches wide riveted to skin for support. Power source for radio was the same as for unit removed. Power source for the compass is from the main buss with a 5 amp fuse. Installed utility light s at either side of cockpit on aft windsheild support posts. Power is from the main buss with a 5 amp circuit breaker.

Item	wt	arm	moment
a/c empty	1700.5	77.2	131403.05
VC-27	-3	65	-195.0
Power sup	-7	84	-588.00
Mark V	6	66	396.0
Power supp.	3.5	156	546.0
VOA-3 Ind.	.75	66	49.5
VOA-3 converter	4.17	164	683.88
Compass indicator	1.0	66	66.0
Compass inverter	2.0	77	154.0
Compass Transmitter	3.0	183	579.0
#1 ant.	.8	179	143.2
#2 ant	.8	209	167.2
KMA-1 switch and 3 lt marker	2.7	68	183.6
	1716.2		133588.43

E.W.C.G.= $\frac{133588.43}{1716.2}$ = 77.8" aft of datum

New empty wt. 1716.2 lbs useful load 933.8 lbs.
An electrical load analisis shows a maximum current drain possible of 32.2 amps, generator installed is a 35 amp generator Item 301b of a/c spec a777.

Instrument panel placarded - Do not operate all 3 radios when Navigation lights are used.

Equipment list revised. Magnetic compass rechecked with radios on.

☑ ADDITIONAL SHEETS ARE ATTACHED

U.S. GOVERNMENT PRINTING OFFICE : 1985 OF—761-748

FAA AIRCRAFT REGISTRY
CAMERA NO. 2N DATE: 7-16-82

901 1166

Form approved.
Budget Bureau No. 04-R000.

FEDERAL AVIATION AGENCY

MAJOR REPAIR AND ALTERATION FORM (AIRFRAME, POWERPLANT, PROPELLER OR APPLIANCE)

1. AIRCRAFT	MAKE: Beech	MODEL: B-35	SERIAL NO.: D-2520	NATIONALITY AND REGISTRATION MARK: N8865A (Standard)
2. OWNER	NAME (First, middle, last): August Gross Jr. & Albert Schultz		ADDRESS (Street and number, city, zone and State): 1820 Cathedral Rd. Huntingdon Valley, Pennsylvania	

3. COMPLETE ONLY FOR UNIT REPAIRED AND/OR ALTERED. DESCRIBE WORK ACCOMPLISHED ON REVERSE IN ACCORDANCE WITH CIVIL AERONAUTICS MANUAL 18.

UNIT	MAKE	MODEL	SERIAL NO.	NATURE OF WORK (Check): MAJOR REPAIR	MAJOR ALTERATION
a. AIRFRAME	(As described in item 1 above)				X
b. POWERPLANT					2
c. PROPELLER					
d. APPLIANCE	TYPE AND MANUFACTURER				

4. AIRCRAFT WEIGHT AND BALANCE DATA
*AFTER the repairs and/or alterations described below were made.

This item must be completed by repair or alteration agency. However, in the case of a spare component, it will not be completed until such component is installed in an aircraft. At this time, it will be completed by the installing agency, if applicable.

CATEGORY	EMPTY WEIGHT (Pounds)*	EMPTY CENTER OF GRAVITY (Inches from datum)*	USEFUL LOAD (Pounds)*
Utility	1705.5	77.19	944.5

5. CONFORMITY STATEMENT (Complete and check)

a. AGENCY'S NAME AND ADDRESS	b. KIND OF AGENCY	c. CERTIFICATE NO.
Albert O. Lewis Box 133 R.F.D.#2 Williamstown N.J.	[X] U. S. Certificated Mechanic. [ ] Foreign Certificated Mechanic. [ ] Certificated Repair Station. [ ] Manufacturer. [ ] (Check if repair or alteration was made under delegation option procedures.)	1375004 A&P

d. I certify that the repair and/or alteration made to the unit(s) identified under item 3 above and described on the reverse or attachments hereto have been made in accordance with the requirements of Part 18 of the U. S. Civil Air Regulations and that the information furnished herein is true and correct to the best of my knowledge.

3-19-65 (Date repair and/or alteration completed)

Albert O. Lewis (Signature of authorized individual)

6. APPROVAL FOR RETURN TO SERVICE (Check and complete appropriate items)

Pursuant to the authority specified below the unit identified in item 3 was inspected in the manner prescribed by the Administrator of the Federal Aviation Agency and is

3 [X] APPROVED [ ] REJECTED BY [ ] FAA Designee [ ] FAA Flight Standards Inspector [ ] Manufacturer [ ] Repair Station [ ] Canadian Department of Transport Inspector of Aircraft [X] Other (Specify) Inspection Authorization

3-19-65 (Date of approval or rejection)

Albert O. Lewis 1375004 A&P (Signature of authorized individual; title, and certificate number)

7. TO BE COMPLETED ONLY BY FAA PERSONNEL

a. [ ] Forwarded for engineering comment [ ] See attached memorandum

b. [X] Accepted 3/23/65 (Date) [ ] Reinspected (Date) [ ] Spot Checked APR 14 1965 (Date)

EASTERN REGION GADO 1-9 (FAA designation number)

John J. Bugbee (Signature Flight Standards Inspector)

Form FAA-337 (4-52)

FAA AIRCRAFT REGISTRY
CAMERA NO. 2N DATE: 7-16-82

8

INSTRUCTIONS

This form must be completed in duplicate each time a major repair and/or alteration is made of an aircraft, airframe, powerplant, propeller or appliance. After the repair and/or alteration has been inspected and item 6 completed, the original copy of this form will be made available to the aircraft owner for retention as part of the aircraft records. The duplicate copy is retained by the FAA for administrative purposes.

See CAM 18 for detailed instructions concerning the information to be furnished with this form and instructions concerning its preparation.

8. DESCRIPTION OF WORK ACCOMPLISHED.*

Winslow Aerofilter model # 30409A with element # 1A0235 installed per Winslow installation Drawing # 3-77701B with supplemental type certificate SA4-707. All fire and safety regulations complied with.

Weight and Balance

E.WT	1700.5	77.200	131403.05
Filter	5.0	49.000	245.00
	1705.5	77.19	131648.05
New C.G.		77.19"	

*If additional space is needed attach additional sheets bearing aircraft nationality and registration mark and date work completed.

Check block if additional sheets are attached. ☐

☆ U.S. GOVERNMENT PRINTING OFFICE : 1961 O - 587360

FAA AIRCRAFT REGISTRY
CAMERA NO. 2N DATE: 7-16-82

Form approved.
Budget Bureau No. 04-R060.

FEDERAL AVIATION AGENCY

MAJOR REPAIR AND ALTERATION FORM (AIRFRAME, POWERPLANT, PROPELLER OR APPLIANCE)

1. AIRCRAFT	MAKE	MODEL	SERIAL NO.	NATIONALITY AND REGISTRATION MARK
	Beech	B-35	D-2820 2520	N 8865-A STANDARD

2. OWNER	NAME (First, middle, last)	ADDRESS (Street and number, city, zone and State)
	Robert K Morton & Albert Schultz	1240 Grant Ave. Phila. 15, Pa.

3. COMPLETE ONLY FOR UNIT REPAIRED AND/OR ALTERED. DESCRIBE WORK ACCOMPLISHED ON REVERSE IN ACCORDANCE WITH CIVIL AERONAUTICS MANUAL 18.

UNIT	MAKE	MODEL	SERIAL NO.	NATURE OF WORK (Check) MAJOR REPAIR	MAJOR ALTERATION
a. AIRFRAME	(As described in item 1 above)				X
b. POWERPLANT					
c. PROPELLER					
d. APPLIANCE	TYPE AND MANUFACTURER				

4. AIRCRAFT WEIGHT AND BALANCE DATA *AFTER the repairs and/or alterations described below were made.

This item must be completed by repair or alteration agency. However, in the case of a spare component, it will not be completed until such component is installed in an aircraft. At this time, it will be completed by the installing agency, if applicable.

CATEGORY	EMPTY WEIGHT (Pounds)*	EMPTY CENTER OF GRAVITY (Inches from datum)*	USEFUL LOAD (Pounds)*
Utility	1705.2	77.2	944.8

5. CONFORMITY STATEMENT (Complete and check)

a. AGENCY'S NAME AND ADDRESS	b. KIND OF AGENCY	c. CERTIFICATE NO.
Sidney M. Wayne 809 Lawler St. Phila. 16, Pa.	☒ U. S. Certificated Mechanic. ☐ Foreign Certificated Mechanic. ☐ Certificated Repair Station. ☐ Manufacturer. ☐ (Check if repair or alteration was made under delegation option procedures.)	A&P 1413940

d. I certify that the repair and/or alteration made to the unit(s) identified under item 3 above and described on the reverse or attachments hereto have been made in accordance with the requirements of Part 18 of the U. S. Civil Air Regulations and that the information furnished herein is true and correct to the best of my knowledge.

June 6, 1963 (Date repair and/or alteration completed)

Sidney M. Wayne (Signature of authorized individual)

6. APPROVAL FOR RETURN TO SERVICE (Check and complete appropriate items)

Pursuant to the authority specified below the unit identified in item 3 was inspected in the manner prescribed by the Administrator of the Federal Aviation Agency and is

☑ APPROVED ☐ REJECTED } BY { ☐ FAA Designee ☐ FAA Flight Standards Inspector ☐ Manufacturer ☐ Repair Station ☐ Canadian Department of Transport Inspector of Aircraft ☑ Other (Specify) INSPECTION AUTHORIZATION

6-8-63 (Date of approval or rejection)

Albert O. Lewis 1375004 A&P (Signature of authorized individual; title or identification number)

7. TO BE COMPLETED ONLY BY FAA PERSONNEL

a. ☐ Forwarded for engineering comment ☐ See attached memorandum

b. ☒ Accepted 6-18-63 (Date) ☐ Reinspected _____ (Date) ☐ Spot Checked 38 JUN 27 1963 (Date)

EASTERN REGION GADO (FAA Station number)

B. S. VanAstedalen (Signature Flight Standards Inspector)

Form FAA-337 (4-62)

FAA AIRCRAFT REGISTRY
CAMERA NO. 2N DATE: 7-16-82

MICRO

INSTRUCTIONS

This form must be completed in duplicate each time a major repair and/or alteration is made of an aircraft, airframe, powerplant, propeller or appliance. After the repair and/or alteration has been inspected and item 6 completed, the original copy of this form will be made available to the aircraft owner for retention as part of the aircraft records. The duplicate copy is retained by the FAA for administrative purposes.

See CAM 18 for detailed instructions concerning the information to be furnished with this form and instructions concerning its preparation.

8. DESCRIPTION OF WORK ACCOMPLISHED:*

Installation of Hartzell Prop. #HC-A2X20-4 as per Hartzell instr, S.T.C. # SAL-570:

1- Removed B-200 prop. spinner, pitch change motor.
2- Installed Hartzell Prop. #HC-A2X20-4. blade #8833-4.
3- Installed Hartzell Tee drive & gov. relocating fuel-pump.
4- Installed prop. gov. control, prop-spinner.
5- Added copy to FLT. Limit. Manual

- - - - - - - - - - - - - - - - - - - -

Weight & Balance

E WT (prev)	1688.2	77.7	131225.09
B-200 prop	— 56.0	2.0	— 112.00
Pitch Motor	— 5.0	8.0	— 40.00
Spinner	— 3.0	0.0	0.00
Hartz Prop.	66.0	2.0	132.00
Spinner	4.0	0.0	0.00
Gov. Tee Drive	6.5	42.0	273.00
Controls & Hardware	1.5	54.0	81.00
Prop Hardware	3.0	22.0	66.00
	1705.2	77.2	131625.09

EW C.G. = 77.2

Fwd. Check

E.WT	1705.2	77.2	131625.09
Pilot	170.0	85.0	14450.00
Fuel (39)	234.0	75.0	17550.00
Oil (2½)	19.0	35.0	665.00
	2128.2	77.1	164290.09

MOST FWD C.G. = 77.1

Fwd. C.G. Within Limits

*If additional space is needed attach additional sheets bearing aircraft nationality and registration mark and date work completed.

Check block if additional sheets are attached. ☐

FAA AIRCRAFT REGISTRY
CAMERA NO. 2N DATE: 7-16-82

Form approved.
Budget Bureau No. 04-R060.

FEDERAL AVIATION AGENCY

MAJOR REPAIR AND ALTERATION FORM (AIRFRAME, POWERPLANT, PROPELLER OR APPLIANCE)

1. AIRCRAFT	MAKE	MODEL	SERIAL NO.	NATIONALITY AND REGISTRATION MARK
	Beech	B-35	D2520	N8865A

2. OWNER	NAME (*First, middle, last*)	ADDRESS (*Street and number, city, zone and State*)
	Robert K. Morton & Albert Schultz	1240 Grant Avenue Philadelphia 15, Pa.

3. COMPLETE ONLY FOR UNIT REPAIRED AND/OR ALTERED. DESCRIBE WORK ACCOMPLISHED ON REVERSE IN ACCORDANCE WITH CIVIL AERONAUTICS MANUAL 18.

UNIT	MAKE	MODEL	SERIAL NO.	NATURE OF WORK (*Check*) MAJOR REPAIR	MAJOR ALTERATION
a. AIRFRAME	••••••••••••••••••••• (*As described in Item 1 above*) •••••••••••••••••••••				X
b. POWERPLANT					
c. PROPELLER					
d. APPLIANCE	TYPE AND MANUFACTURER				

4. AIRCRAFT WEIGHT AND BALANCE DATA
**AFTER the repairs and/or alterations described below were made.*

This item must be completed by repair or alteration agency. *However, in the case of a spare component, it will not be completed until such component is installed in an aircraft. At this time, it will be completed by the installing agency, if applicable.

CATEGORY	EMPTY WEIGHT (*Pounds*)*	EMPTY CENTER OF GRAVITY (*Inches from datum*)*	USEFUL LOAD (*Pounds*)*
Utility	1688[illegible]	77.7	961.8

5. CONFORMITY STATEMENT (*Complete and check*)

a. AGENCY'S NAME AND ADDRESS	b. KIND OF AGENCY	c. CERTIFICATE NO.
Sidney M. Wayne 809 Lawler Street Philadelphia 16, Pa.	☒ U. S. Certificated Mechanic. ☐ Foreign Certificated Mechanic. ☐ Certificated Repair Station. ☐ Manufacturer. ☐ (Check if repair or alteration was made under delegation option procedures.)	A&P 1413940

d. I certify that the repair and/or alteration made to the unit(s) identified under item 3 above and described on the reverse or attachments hereto have been made in accordance with the requirements of Part 18 of the U. S. Civil Air Regulations and that the information furnished herein is true and correct to the best of my knowledge.

December 1, 1962
(Date repair and/or alteration completed)

Sidney M. Wayne
(Signature of authorized individual)

6. APPROVAL FOR RETURN TO SERVICE (*Check and complete appropriate items*)
Pursuant to the authority specified below the unit identified in item 3 was inspected in the manner prescribed by the Administrator of the Federal Aviation Agency and is

☒ APPROVED ☐ REJECTED } BY { ☐ FAA Designee ☐ FAA Flight Standards Inspector ☐ Manufacturer ☐ Repair Station ☒ Canadian Department of Transport Inspector of Aircraft ☒ Other (*Specify*) Inspection Authorization

12 Jan 63
(Date of approval or rejection)

Walter J. Ellis #1455503
(Signature of authorized individual, title or identification number)

7. TO BE COMPLETED ONLY BY FAA PERSONNEL

a. ☐ Forwarded for engineering comment ☐ See attached memorandum

b. ☒ Accepted 1-29-63 (Date) ☐ Reinspected _____ (Date) ☐ Spot Checked _____ (Date)

EASTERN REGION GADO No. 9
(FAA designation number)

B. S. VanArsdalen
(Signature Flight Standards Inspector)

FEB 15 1963

38

Form FAA-337 (4-52)

FAA AIRCRAFT REGISTRY
CAMERA NO. 2N DATE: 7-16-82

INSTRUCTIONS

This form must be completed in duplicate each time a major repair and/or alteration is made of an aircraft, airframe, powerplant, propeller or appliance. After the repair and/or alteration has been inspected and item 6 completed, the original copy of this form will be made available to the aircraft owner for retention as part of the aircraft records. The duplicate copy is retained by the FAA for administrative purposes.

See CAM 18 for detailed instructions concerning the information to be furnished with this form and instructions concerning its preparation.

6. DESCRIPTION OF WORK ACCOMPLISHED*

Installed Beech Kit #35-683-1 large rear window kit.
Installed Beech Kit #35-660 Wing tip kit.

Item	Weight	Arm	Moment
Aircraft empty wt.	1678.2	77.36	129835.09
Kit #35-683-1	7.0	160.00	1120.00
Kit #35-660	3.0	90.00	270.00
	1688.2		131225.09

$$\frac{131225.09}{1688.2} = 77.7$$

New empty weight C.G. is 77.7 inches aft of datum.

END

FEDERAL AVIATION AGENCY—AIRCRAFT REGISTRATION BR.
FEB 5 3 28 PM '63
OKLAHOMA CITY, OKLA.

*If additional space is needed attach additional sheets bearing aircraft nationality and registration mark and date work completed.

Check block if additional sheets are attached. ☐

U. S. GOVERNMENT PRINTING OFFICE: 1961—O—587360

FAA AIRCRAFT REGISTRY
CAMERA NO. 2N DATE: 7-16-82

FEDERAL AVIATION AGENCY

Form approved.
Budget Bureau No. 04-R060.

MAJOR REPAIR AND ALTERATION FORM (AIRFRAME, POWERPLANT, PROPELLER OR APPLIANCE)

1. AIRCRAFT	MAKE	MODEL	SERIAL NO.	NATIONALITY AND REGISTRATION MARK
	Beech	B35	D-2520	N 8865A (STANDARD)

2. OWNER	NAME (*First, middle, last*)	ADDRESS (*Street and number, city, zone and State*)
	Albert Schultz and Harold Weiss	406 Mount View Drive Mount Holly, New Jersey

3. COMPLETE ONLY FOR UNIT REPAIRED AND/OR ALTERED. DESCRIBE WORK ACCOMPLISHED ON REVERSE IN ACCORDANCE WITH CIVIL AERONAUTICS MANUAL 18.

UNIT	MAKE	MODEL	SERIAL NO.	NATURE OF WORK (*Check*) MAJOR REPAIR	MAJOR ALTERATION
a. AIRFRAME	(As described in item 1 above)				X
b. POWERPLANT					
c. PROPELLER					
d. APPLIANCE	TYPE AND MANUFACTURER				

The data identified herein complied with applicable airworthiness requirements and is approved only for the aircraft described subject to conformity inspection by a person authorized in CAR 18.11(b).
APPROVING INSPECTOR [signature]
DATE 5-1-62

4. AIRCRAFT WEIGHT AND BALANCE DATA
**AFTER the repairs and/or alterations described below were made.*

This item must be completed by repair or alteration agency. However, in the case of a spare component, it will not be completed until such component is installed in an aircraft. At this time, it will be completed by the installing agency, if applicable.

CATEGORY	EMPTY WEIGHT (*Pounds*)*	EMPTY CENTER OF GRAVITY (*Inches from datum*)*	USEFUL LOAD (*Pounds*)*
Utility	1678.2	77.56	971.8

5. CONFORMITY STATEMENT (*Complete and check*)

a. AGENCY'S NAME AND ADDRESS	b. KIND OF AGENCY	c. CERTIFICATE NO.
George Townson Graham and Tallyho Rds Meadowbrook, Pa. for ABCO Electronics	☒ U. S. Certificated Mechanic. ☐ Foreign Certificated Mechanic. ☐ Certificated Repair Station. ☐ Manufacturer. ☐ (Check if repair or alteration was made under delegation option procedures.)	AE 13662

d. I certify that the repair and/or alteration made to the unit(s) identified under item 3 above and described on the reverse or attachments hereto have been made in accordance with the requirements of Part 18 of the U. S. Civil Air Regulations and that the information furnished herein is true and correct to the best of my knowledge.

April 29, 1962
(Date repair and/or alteration completed)

George Townson AE 13662
(Signature of authorized individual)

6. APPROVAL FOR RETURN TO SERVICE (*Check and complete appropriate items*)

Pursuant to the authority specified below the unit identified in item 3 was inspected in the manner prescribed by the Administrator of the Federal Aviation Agency and is

☒ APPROVED ☐ REJECTED } BY { ☐ FAA Designee ☐ FAA Flight Standards Inspector ☐ Manufacturer ☐ Repair Station ☐ Canadian Department of Transport Inspector of Aircraft ☒ Other (*Specify*) IA

May 5, 1962
(Date of approval or rejection)

George Townson AE 13662
(Signature of authorized individual; title or identification number)

7. TO BE COMPLETED ONLY BY FAA PERSONNEL

a. ☐ Forwarded for engineering comment ☐ See attached memorandum

b. ☒ Accepted 5-15-62 (Date) ☐ Reinspected _____ (Date) ☐ Spot Checked _____ (Date)

EASTERN REGION GADO No. 9
(FAA designation number)

B. S. Van Ostrodalen
(Signature Flight Standards Inspector)

A.C.U. JUL 4 1962 A.

45

Form FAA-337 (4-62)

INSTRUCTIONS

This form must be completed in duplicate each time a major repair and/or alteration is made of an aircraft, airframe, powerplant, propeller or appliance. After the repair and/or alteration has been inspected and item 6 completed, the original copy of this form will be made available to the aircraft owner for retention as part of the aircraft records. The duplicate copy is retained by the FAA for administrative purposes.

See CAM 18 for detailed instructions concerning the information to be furnished with this form and instructions concerning its preparation.

8. DESCRIPTION OF WORK ACCOMPLISHED.*

1. Removed Lear LTR-5 from left side of instrument panel
2. Removed Lear power supply from floor in front of RH front seat
3. Removee Lear indicator from below panel on left side
4. Install King KY-90 and KR-40 in place of Lear, riveting gis dust covers of both KY-90 and and KR-40 to flange of instrument panel using (10) AN456-4 rivets
5. Installed King KS-501 power supply in front of right hand front seat securing to floor with (4) 632 screws and rivmts
6. Removed Narco Omni indicator from above the Lear LTR6-A in instrument panel and installed King KI-200 omni indicator, secured with (3) 632 screws.
7. King equipment connected to the electrical source using the same fuse bus as Lear LTR*5, for KY-90 and the KR-40 connected with 12" of #16 wire thru a 2 amp fuse.

Weight and Balance

EWT. (prev)	1683.9	77.4	130353.86
Lear LTR-5	- 6.4	68.00	435.00
Power Sup	- 11.0	84.125	925.37
Lear Ind	- 1.3	73.00	94.90
Narco Ind	- .5	73.00	36.00
King KY & KR	7.5	68.00	510.00
Power Sup	4.0	84.125	336.50
King Ind	2.0	73.00	146.00
	1678.2	77.36	129835.09

Electrical Load Annal.

Master Sw	1.6
King KY-90	3.0
King KR-40	2.0
Narco VO-27	4.0
Lear ADF-12	3.8
Nav Lights	3.6
Rot. Beacon	5.4
	23.8

Generator- Delco-Remy 1101887 35A
Annalysis run using precision Volt-ohmmeter and auxiliary power.

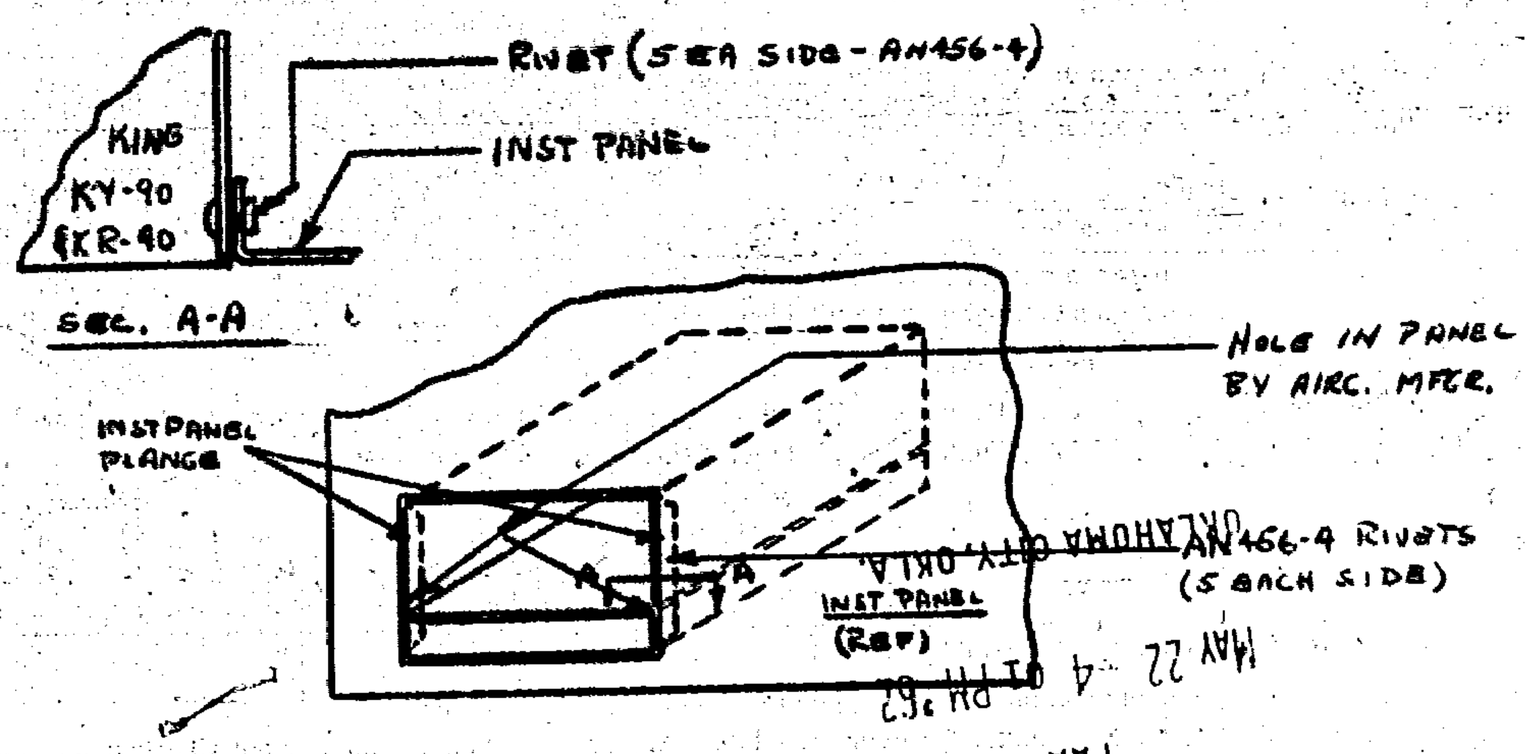

*If additional space is needed attach additional sheets bearing aircraft nationality and registration mark and date work completed.

Check block if additional sheets are attached. ☐

FAA AIRCRAFT REGISTRY
CAMERA NO. 2N DATE: 7-16-82

APR 12 Rec'd

FAA

Form approved.
Budget Bureau No. 04-R060.

FEDERAL AVIATION AGENCY

MAJOR REPAIR AND ALTERATION FORM (AIRFRAME, POWERPLANT, PROPELLER OR APPLIANCE)

1. AIRCRAFT	MAKE	MODEL	SERIAL NO.	NATIONALITY AND REGISTRATION MARK
	Beechcraft	B-35	D-2520	N8865A

2. OWNER	NAME (*First, middle, last*)	ADDRESS (*Street and number, city, zone and State*)
	Chemclene Corporation	Malvern, Pennsylvania

3. COMPLETE ONLY FOR UNIT REPAIRED AND/OR ALTERED. DESCRIBE WORK ACCOMPLISHED ON REVERSE IN ACCORDANCE WITH CIVIL AERONAUTICS MANUAL 18.

UNIT	MAKE	MODEL	SERIAL NO.	NATURE OF WORK (*Check*) MAJOR REPAIR	MAJOR ALTERATION
a. AIRFRAME	(*As described in item 1 above*)				X
b. POWERPLANT					
c. PROPELLER					
d. APPLIANCE	TYPE AND MANUFACTURER				

4. AIRCRAFT WEIGHT AND BALANCE DATA
**AFTER the repairs and/or alterations described below were made.*

This item must be completed by repair or alteration agency. However, in the case of a spare component, it will not be completed until such component is installed in an aircraft. At this time, it will be completed by the installing agency, if applicable.

CATEGORY	EMPTY WEIGHT (*Pounds*)*	EMPTY CENTER OF GRAVITY (*Inches from datum*)*	USEFUL LOAD (*Pounds*)*
Utility	1683.9	77.4	966.1

5. CONFORMITY STATEMENT (*Complete and check*)

a. AGENCY'S NAME AND ADDRESS	b. KIND OF AGENCY	c. CERTIFICATE NO.
Reading Aviation Service, Inc. P.O. Box 1201 Reading, Pennsylvania	☐ U. S. Certificated Mechanic. ☐ Foreign Certificated Mechanic. ■ Certificated Repair Station. ☐ Manufacturer. ☐ (Check if repair or alteration was made under delegation option procedures.)	3535

d. I certify that the repair and/or alteration made to the unit(s) identified under item 3 above and described on the reverse or attachments hereto have been made in accordance with the requirements of Part 18 of the U. S. Civil Air Regulations and that the information furnished herein is true and correct to the best of my knowledge.

7 April 1961
(Date repair and/or alteration completed)

Clarence E. Faust — Clarence E. Faust A&P1360048
(Signature of authorized individual)

6. APPROVAL FOR RETURN TO SERVICE (*Check and complete appropriate items*)
Pursuant to the authority specified below the unit identified in item 3 was inspected in the manner prescribed by the Administrator of the Federal Aviation Agency and is

■ APPROVED ☐ REJECTED } BY { ☐ FAA Designee ☐ FAA Flight Standards Inspector ☐ Manufacturer ■ Repair Station ☐ Canadian Department of Transport Inspector of Aircraft ☐ Other (*Specify*)

7 April 1961
(Date of approval or rejection)

Leon W. Bright — Leon W. Bright A&P 358187
(Signature of authorized individual: title or identification number)

7. TO BE COMPLETED ONLY BY FAA PERSONNEL

a. ☐ Forwarded for engineering comment ☐ See attached memorandum

b. ☒ Accepted 4/13/61 (Date) ☐ Reinspected _____ (Date) ☐ Spot Checked _____ (Date)

Rec. 1 NY
ASDO 3
(FAA designation number)

(Signature Flight Standards Inspector)

A.C.U. APR 25 '61

Form FAA-337 (4-52)

FS 1340

FAA AIRCRAFT REGISTRY
CAMERA NO. 2N DATE: 7-16-82

INSTRUCTIONS

This form must be completed in duplicate each time a major repair and/or alteration is made of an aircraft, airframe, powerplant, propeller or appliance. After the repair and/or alteration has been inspected and item 6 completed, the original copy of this form will be made available to the aircraft owner for retention as part of the aircraft records. The duplicate copy is retained by the FAA for administrative purposes.

See CAM 18 for detailed instructions concerning the information to be furnished with this form and instructions concerning its preparation.

6. DESCRIPTION OF WORK ACCOMPLISHED.*

Grimes rotating beacon Mod. D7080-1-12 installed bottom of fuselage as per CAM-18 Fig. 12-2.

Electrical Load Analysis attached. Low Voltage Diagram No. 1290-1-1 attached.

	Weight	Arm	Moment
Aircraft Empty Weight	1681.9	77.4	130202.9
Beacon D7080-1-12 W/doubler	2.0	107.0	214.0
Aircraft New Empty Weight	1683.9		130416.9

Aircraft New E.W.C.G. $= \frac{130416.9}{1683.9} = 77.4$

Work has been accomplished in accordance with requirements as set forth in CAR-3 and CAM-18.

*If additional space is needed attach additional sheets bearing aircraft nationality and registration mark and date work completed.

Check block if additional sheets are attached. ☐

READING AVIATION SERVICE, INC.
P.O. BOX 1201
READING, PENNSYLVANIA

ELECTRICAL LOAD ANALYSIS

CUSTOMER: Chemclene Corporation REG. NO.: N8865A

AIRCRAFT: Beechcraft 35 DATE: 7 April 1961

Batteries: (1) 33AH R33 12Volt

Generators: (1) 35 ampere 14 Volt Delco Remy Model 1101887

Total generator capacity 35 ampere.

Total ampere load during any cruise condition is 25 ampere.

Maximum continuous load does not exceed 80% of total generator output. (28 ampere.)

This load analysis was performed in accordance with procedure outlined in F.A.A. Manual 18.30-12(i).

FAA AIRCRAFT REGISTRY
CAMERA NO. 2N DATE: 7-16-82

FAA AIRCRAFT REGISTRY
CAMERA NO. 2N DATE: 7-16-82

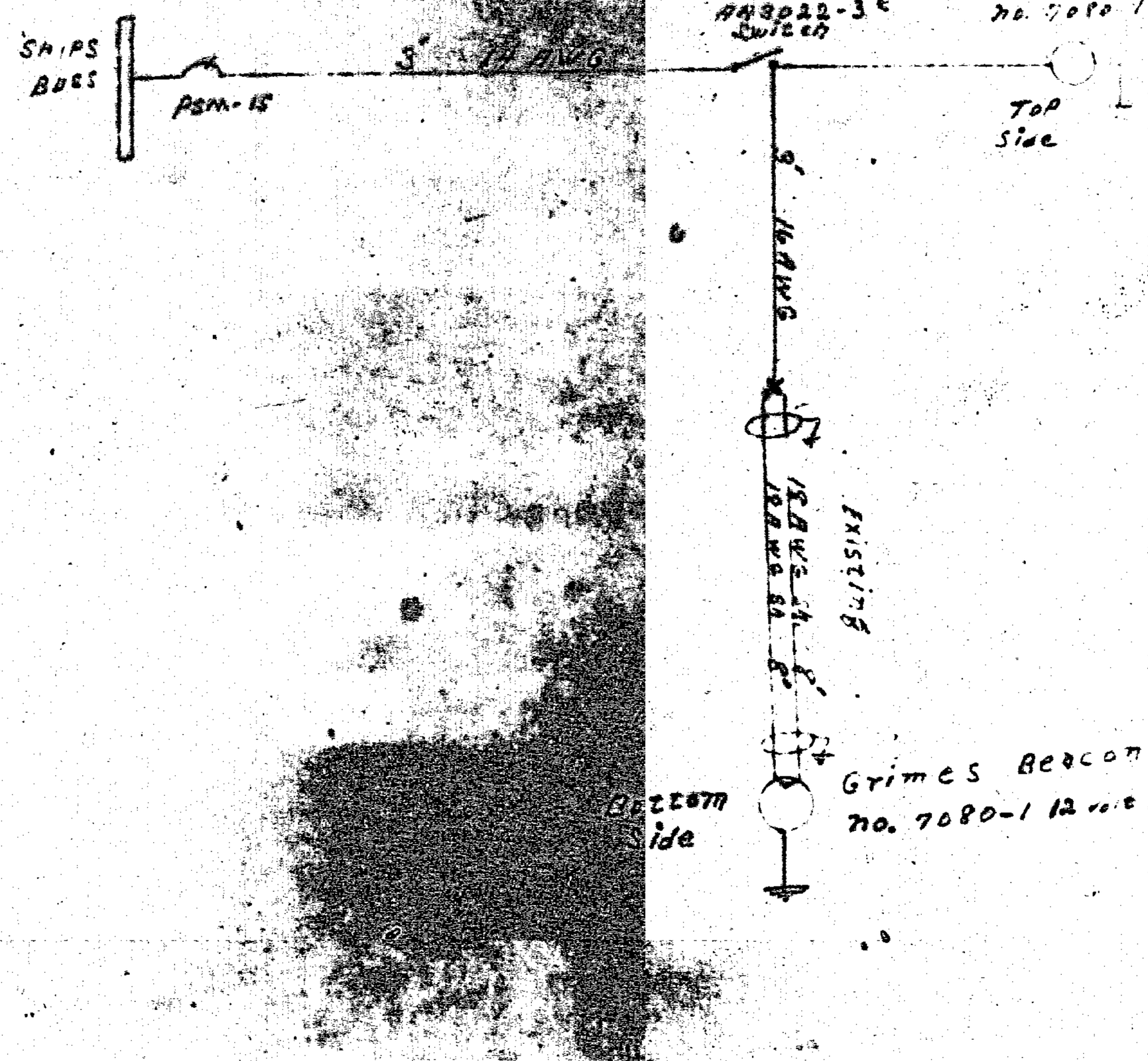

READING AVIATION SERVICE, INC.
READING, PENNA.

DRAWN BY	CHECKED BY	APPROVED BY	DATE
[illegible]			5-6-61

TITLE: Rotating Beacons

JOB No. 18699-H

DWG. No. 1290-1-1

FAA AIRCRAFT REGISTRY
CAMERA NO. 2N DATE: 7-16-82

FAA AIRCRAFT REGISTRY
CAMERA NO. 2N DATE: 7-16-82

U. S. DEPARTMENT OF COMMERCE
CIVIL AERONAUTICS ADMINISTRATION

Form approved.
Budget Bureau No. 41-R052.4.

MAJOR REPAIR AND ALTERATION FORM (AIRFRAME, POWERPLANT, PROPELLER OR APPLIANCE)

1. AIRCRAFT	MAKE	MODEL	SERIAL NO.	NATIONALITY AND REGISTRATION MARK
	BEECHCRAFT	B-35	D-2520	N8865A (STD)

2. OWNER	NAME (*First, middle, last*)	ADDRESS (*Street and number, city, zone and State*)
	Chemclene Corp.	Malvern, Pa.

3. COMPLETE ONLY FOR UNIT REPAIRED AND/OR ALTERED. DESCRIBE WORK ACCOMPLISHED ON REVERSE IN ACCORDANCE WITH CIVIL AERONAUTICS MANUAL 18.

UNIT	MAKE	MODEL	SERIAL NO.	NATURE OF WORK (*Check*) MAJOR REPAIR	MAJOR ALTERATION
a. AIRFRAME	(*As described in item 1 above*)				X
b. POWERPLANT					
c. PROPELLER					
d. APPLIANCE	TYPE AND MANUFACTURER				

4. AIRCRAFT WEIGHT AND BALANCE DATA
**AFTER the repairs and/or alterations described below were made.*

This item must be completed by repair or alteration agency. However, in the case of a spare component, it will not be completed until such component is installed in an aircraft. At this time, it will be completed by the installing agency, if applicable.

CATEGORY	EMPTY WEIGHT (*Pounds*)*	EMPTY CENTER OF GRAVITY (*Inches from datum*)*	USEFUL LOAD (*Pounds*)*
Utility	1681.9	77.4	968.1

5. CONFORMITY STATEMENT (*Complete and check*)

a. AGENCY'S NAME AND ADDRESS	b. KIND OF AGENCY	c. CERTIFICATE NO.
Charles E. Straubel 510 Hamilton St., Norristown, Pa. for Atlantic Aviation Service, Inc. International Airport Box 5318 Philadelphia 42, Pa.	☒ U. S. Certificated Mechanic. ☐ Foreign Certificated Mechanic. ☐ Certificated Repair Station. ☐ Manufacturer. ☐ (Check if repair or alteration was made under delegation option procedures.)	A & E 370708

d. I certify that the repair and/or alteration made to the unit(s) identified under item 3 above and described on the reverse or attachments hereto have been made in accordance with the requirements of Part 18 of the U. S. Civil Air Regulations and that the information furnished herein is true and correct to the best of my knowledge.

2-10-60 (Date repair and/or alteration completed)

Charles E. Straubel (Signature of authorized individual)

6. APPROVAL FOR RETURN TO SERVICE (*Check and complete appropriate items*)

Pursuant to the authority specified below the unit identified in item 3 was inspected in the manner prescribed by the Administrator and is

☒ APPROVED ☐ REJECTED } BY { ☐ CAA Designee ☐ Manufacturer ☐ Canadian Department of Transport Inspector of Aircraft ☐ CAA Aviation Safety Agent ☐ Repair Station ☒ Other (*Specify*) Inspection Authorization

2-10-60 (Date of approval or rejection)

Charles E. Straubel 370708 (Signature of authorized individual; title or identification number)

7. TO BE COMPLETED ONLY BY CAA PERSONNEL

a. ☐ Forwarded for engineering comment ☐ See attached memorandum

b. ☒ Accepted 2-12-60 (Date) ☐ Reinspected _____ (Date) ☐ Spot Checked _____ (Date) 8-22-60 MC

Reg. 1 NY
ASDO 9 (CAA designation number)

B. S. Van Astodalen AP (Signature Aviation Safety Agent)

16—54010-4

Form ACA-337 (4-52)

FAA AIRCRAFT REGISTRY
CAMERA NO. 2N DATE: 7-16-82

INSTRUCTIONS

This form must be completed in duplicate each time a major repair and/or alteration is made of an aircraft, airframe, powerplant, propeller or appliance. After the repair and/or alteration has been inspected and item 6 completed, the original copy of this form will be made available to the aircraft owner for retention as part of the aircraft records. The duplicate copy is retained by the CAA for administrative purposes.

See CAM 18 for detailed instructions concerning the information to be furnished with this form and instructions concerning its preparation.

6. DESCRIPTION OF WORK ACCOMPLISHED.*

Installed Narco VC-27 Simplexer and power supply according to Beechcraft Installation instructions and Narco wiring diagrams. Item #301 (a) 25 amp generator removed. Item #301 (b) 35 amp generator, voltage regulator, and circuit breaker installed.

ITEM	WEIGHT	ARM	MOMENT
Aircraft	1669.9	76.98	129559.9
Narco VC-27	3.0	65.0	195.0
Power Supply	7.0	52.0	364.0
Gen. Differential	2.0	42.0	84.0
	1681.9	77.4	130202.9

New Empty Weight C.G. 77.4

Refer to loading chart for weight distribution. Electrical load analysis PERFORMED **and results fell within the 80% limit as prescribed in C.A.M.# 18.**

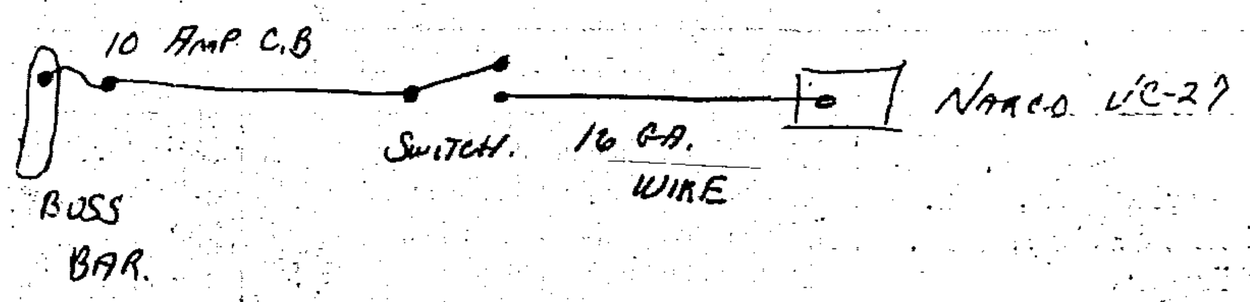

*If additional space is needed attach additional sheets bearing aircraft nationality and registration mark and date work completed.

Check block if additional sheets are attached. ☐

U. S. GOVERNMENT PRINTING OFFICE 16—54010-4

FAA AIRCRAFT REGISTRY
CAMERA NO. 2N DATE: 7-16-82

FS-16

U. S. DEPARTMENT OF COMMERCE
CIVIL AERONAUTICS ADMINISTRATION

Form approved.
Budget Bureau No. 41-R052.4.

MAJOR REPAIR AND ALTERATION FORM (AIRFRAME, POWERPLANT, PROPELLER OR APPLIANCE)

	MAKE	MODEL	SERIAL NO.	NATIONALITY AND REGISTRATION MARK
1. AIRCRAFT	BEECHCRAFT	B-35	D-2520	N-8865A (STD)

	NAME (*First, middle, last*)	ADDRESS (*Street and number, city, zone and State*)
2. OWNER	Chemclene Corp.	Malvern, Pa.

3. COMPLETE ONLY FOR UNIT REPAIRED AND/OR ALTERED. DESCRIBE WORK ACCOMPLISHED ON REVERSE IN ACCORDANCE WITH CIVIL AERONAUTICS MANUAL 18.

UNIT	MAKE	MODEL	SERIAL NO.	NATURE OF WORK (*Check*) MAJOR REPAIR	MAJOR ALTERATION
a. AIRFRAME	(As described in item 1 above)				X
b. POWERPLANT		The data identified herein complied with applicable airworthiness requirements and is approved only for the above-described aircraft subject to conformity inspection by a person authorized in CAR 18.11(b).			
c. PROPELLER					
d. APPLIANCE	TYPE AND MANUFACTURER	APPROVING INSPECTOR B. S. VanUitodalen DATE 2-10-60			

4. AIRCRAFT WEIGHT AND BALANCE DATA
**AFTER the repairs and/or alterations described below were made.*

This item must be completed by repair or alteration agency. However, in the case of a spare component, it will not be completed until such component is installed in an aircraft. At this time, it will be completed by the installing agency, if applicable.

CATEGORY	EMPTY WEIGHT (*Pounds*)*	EMPTY CENTER OF GRAVITY (*Inches from datum*)*	USEFUL LOAD (*Pounds*)*
Utility	1669.9	76.98	980.1

5. CONFORMITY STATEMENT (*Complete and check*)

a. AGENCY'S NAME AND ADDRESS	b. KIND OF AGENCY	c. CERTIFICATE NO.
Charles E. Straubel 510 Hamilton St., Norristown, Pa. for Atlantic Aviation Service, Inc. International Airport Box 5318 Philadelphia 42, Pa.	☒ U. S. Certificated Mechanic. ☐ Foreign Certificated Mechanic. ☐ Certificated Repair Station. ☐ Manufacturer. ☐ (Check if repair or alteration was made under delegation option procedures.)	A & E 370708

d. I certify that the repair and/or alteration made to the unit(s) identified under item 3 above and described on the reverse or attachments hereto have been made in accordance with the requirements of Part 18 of the U. S. Civil Air Regulations and that the information furnished herein is true and correct to the best of my knowledge.

2-10-60 (Date repair and/or alteration completed)

Charles E. Straubel (Signature of authorized individual)

6. APPROVAL FOR RETURN TO SERVICE (*Check and complete appropriate items*)

Pursuant to the authority specified below the unit identified in item 3 was inspected in the manner prescribed by the Administrator and is

☒ APPROVED ☐ REJECTED } BY { ☐ CAA Designee ☐ CAA Aviation Safety Agent ☐ Manufacturer ☐ Repair Station ☐ Canadian Department of Transport Inspector of Aircraft ☒ Other (*Specify*) Inspection Authorization

2-10-60 (Date of approval or rejection)

Charles E. Straubel
Charles E. Straubel #370708 (Signature of authorized individual; title or identification number)

7. TO BE COMPLETED ONLY BY CAA PERSONNEL

a. ☐ Forwarded for engineering comment ☐ See attached memorandum

b. ☐ Accepted _____ (Date) ☐ Reinspected _____ (Date) ☒ Spot Checked 2-12-60 MC (Date)

Reg. 1 NY
ASDO 9 (CAA designation number)

B. S. VanUitodalen (Signature Aviation Safety Agent) 8-22-60 AP

16—54010-4

(1.0)

Form ACA-337 (4-52)

FAA AIRCRAFT REGISTRY
CAMERA NO. 2N DATE: 7-16-82

INSTRUCTIONS

This form must be completed in duplicate each time a major repair and/or alteration is made of an aircraft, airframe, powerplant, propeller or appliance. After the repair and/or alteration has been inspected and item 6 completed, the original copy of this form will be made available to the aircraft owner for retention as part of the aircraft records. The duplicate copy is retained by the CAA for administrative purposes.

See CAM 18 for detailed instructions concerning the information to be furnished with this form and instructions concerning its preparation.

8. DESCRIPTION OF WORK ACCOMPLISHED.*

Installed Narco VOA-2 Omniplexer below throttle quadrant in center of instrument panel. Brackets fabricated from 24st aluminum .051 thickness. Narco VOA-2 secured to brackets and instrument panel using 6/32 machine screws and self locking nuts.

ITEM	WEIGHT	ARM	MOMENT
Aircraft	1666.8	77.6	129358.4
Narco VOA-2	3.1	65.0	201.5
	1669.9	76.98	129559.9

New Empty Weight C.G. 76.98

Refer to loading chart for weight distribution.

*If additional space is needed attach additional sheets bearing aircraft nationality and registration mark and date work completed.

Check block if additional sheets are attached. ☐

U. S. GOVERNMENT PRINTING OFFICE 16—54010-4

FAA AIRCRAFT REGISTRY
CAMERA NO. 2N DATE: 7-16-82

U. S. DEPARTMENT OF COMMERCE
CIVIL AERONAUTICS ADMINISTRATION

Form approved.
Budget Bureau No. 41-R052.4.

MAJOR REPAIR AND ALTERATION FORM (AIRFRAME, POWERPLANT, PROPELLER OR APPLIANCE)

1. AIRCRAFT	MAKE	MODEL	SERIAL NO.	NATIONALITY AND REGISTRATION MARK
	Beechcraft	B-35	D-2520	N8865A (std)

2. OWNER	NAME (*First, middle, last*)	ADDRESS (*Street and number, city, zone and State*)
	Chemolene Corporation	Malvern, Pa.

3. COMPLETE ONLY FOR UNIT REPAIRED AND/OR ALTERED. DESCRIBE WORK ACCOMPLISHED ON REVERSE IN ACCORDANCE WITH CIVIL AERONAUTICS MANUAL 18.

UNIT	MAKE	MODEL	SERIAL NO.	NATURE OF WORK (*Check*) MAJOR REPAIR	MAJOR ALTERATION
a. AIRFRAME	(As described in item 1 above)				X
b. POWERPLANT					
c. PROPELLER					
d. APPLIANCE	TYPE AND MANUFACTURER				

4. AIRCRAFT WEIGHT AND BALANCE DATA
**AFTER the repairs and/or alterations described below were made.*

This item must be completed by repair or alteration agency. However, in the case of a spare component, it will not be completed until such component is installed in an aircraft. At this time, it will be completed by the installing agency, if applicable.

CATEGORY	EMPTY WEIGHT (*Pounds*)*	EMPTY CENTER OF GRAVITY (*Inches from datum*)*	USEFUL LOAD (*Pounds*)*
Utility	1666.8	77.6	983.2

5. CONFORMITY STATEMENT (*Complete and check*)

a. AGENCY'S NAME AND ADDRESS	b. KIND OF AGENCY	c. CERTIFICATE NO.
Robert D. Miller 522 Windover Road Hatboro, Pa. for Wings Incorporated Philadelphia 18, Pa.	☒ U. S. Certificated Mechanic. ☐ Foreign Certificated Mechanic. ☐ Certificated Repair Station. ☐ Manufacturer. ☐ (Check if repair or alteration was made under delegation option procedures.)	Airframe & Powerplant M-6055-40

d. I certify that the repair and/or alteration made to the unit(s) identified under item 3 above and described on the reverse or attachments hereto have been made in accordance with the requirements of Part 18 of the U. S. Civil Air Regulations and that the information furnished herein is true and correct to the best of my knowledge.

1-19-60
(Date repair and/or alteration completed)

Robert D. Miller
ROBERT D. MILLER
(Signature of authorized individual)

6. APPROVAL FOR RETURN TO SERVICE (*Check and complete appropriate items*)

Pursuant to the authority specified below the unit identified in item 3 was inspected in the manner prescribed by the Administrator and is

☒ APPROVED ☐ REJECTED } BY { ☐ CAA Designee ☐ CAA Aviation Safety Agent ☐ Manufacturer ☐ Repair Station ☐ Canadian Department of Transport Inspector of Aircraft ☒ Other (*Specify*) Insp. Auth.

1-19-60
(Date of approval or rejection)

Robert D. Miller
ROBERT D. MILLER 6055-40
(Signature of authorized individual; title or identification number)

7. TO BE COMPLETED ONLY BY CAA PERSONNEL

a. ☐ Forwarded for engineering comment ☐ See attached memorandum

b. ☒ Accepted 1-22-60 (Date) ☐ Reinspected _____ (Date) ☐ Spot Checked _____ (Date)

Reg. 1 N
ASDO 9
(CAA designation number)

B. S. Van Autsdalen
(Signature Aviation Safety Agent)

16—54010-4

Form ACA-337 (4-52)

C 2-3-0

MC

FAA AIRCRAFT REGISTRY
CAMERA NO. 2N DATE: 7-16-82

INSTRUCTIONS

This form must be completed in duplicate each time a major repair and/or alteration is made of an aircraft, airframe, powerplant, propeller or appliance. After the repair and/or alteration has been inspected and item 6 completed, the original copy of this form will be made available to the aircraft owner for retention as part of the aircraft records. The duplicate copy is retained by the CAA for administrative purposes.

See CAM 18 for detailed instructions concerning the information to be furnished with this form and instructions concerning its preparation.

8. DESCRIPTION OF WORK ACCOMPLISHED.*

Removed item 401, (International Parachute Flares)

Item	Wt.	Arm	Moment
Aircraft	1681.8	78.3	131818.4
Item 401	- 15.	164.	- 2460.
Total	1666.8	77.6	129358.4

New empty weight - 77.6

Refer to loading chart for weight distribution.

*If additional space is needed attach additional sheets bearing aircraft nationality and registration mark and date work completed.

Check block if additional sheets are attached. ☐

U. S. GOVERNMENT PRINTING OFFICE 16—54010-4

FAA AIRCRAFT REGISTRY
CAMERA NO. 2N DATE: 7-16-82

U. S. DEPARTMENT OF COMMERCE
CIVIL AERONAUTICS ADMINISTRATION

Form approved.
Budget Bureau No. 41-R052.4.

MAJOR REPAIR AND ALTERATION FORM (AIRFRAME, POWERPLANT, PROPELLER OR APPLIANCE)

1. AIRCRAFT	MAKE	MODEL	SERIAL NO.	NATIONALITY AND REGISTRATION MARK
	Beechcraft	B-35	D-2520	N8865A (STD.)

2. OWNER	NAME (*First, middle, last*)	ADDRESS (*Street and number, city, zone and State*)
	Chemclene Corporation	Malvern, Pa.

3. COMPLETE ONLY FOR UNIT REPAIRED AND/OR ALTERED. DESCRIBE WORK ACCOMPLISHED ON REVERSE IN ACCORDANCE WITH CIVIL AERONAUTICS MANUAL 18.

UNIT	MAKE	MODEL	SERIAL NO.	NATURE OF WORK (*Check*) MAJOR REPAIR	MAJOR ALTERATION
a. AIRFRAME	(*As described in Item 1 above*)				X
b. POWERPLANT					
c. PROPELLER					
d. APPLIANCE	TYPE AND MANUFACTURER				

4. AIRCRAFT WEIGHT AND BALANCE DATA
**AFTER the repairs and/or alterations described below were made.*

This item must be completed by repair or alteration agency. However, in the case of a spare component, it will not be completed until such component is installed in an aircraft. At this time, it will be completed by the installing agency, if applicable.

CATEGORY	EMPTY WEIGHT (*Pounds*)*	EMPTY CENTER OF GRAVITY (*Inches from datum*)*	USEFUL LOAD (*Pounds*)*
Utility	1681.8	78.3	968.2

5. CONFORMITY STATEMENT (*Complete and check*)

a. AGENCY'S NAME AND ADDRESS	b. KIND OF AGENCY	c. CERTIFICATE NO.
Charles E. Straubel 510 Hamilton St., Norristown, Pa. for Atlantic Aviation Service, Inc. International Airport Box 5318, Phila. 42, Pa.	☒ U. S. Certificated Mechanic. ☐ Foreign Certificated Mechanic. ☐ Certificated Repair Station. ☐ Manufacturer. ☐ (Check if repair or alteration was made under delegation option procedures.)	A & E # 370708

d. I certify that the repair and/or alteration made to the unit(s) identified under item 3 above and described on the reverse or attachments hereto have been made in accordance with the requirements of Part 18 of the U. S. Civil Air Regulations and that the information furnished herein is true and correct to the best of my knowledge.

10-7-59 — (Date repair and/or alteration completed)

Charles E. Straubel — (Signature of authorized individual)

6. APPROVAL FOR RETURN TO SERVICE (*Check and complete appropriate items*)

Pursuant to the authority specified below the unit identified in item 3 was inspected in the manner prescribed by the Administrator and is

☒ APPROVED ☐ REJECTED BY ☐ CAA Designee ☐ CAA Aviation Safety Agent ☐ Manufacturer ☐ Repair Station ☐ Canadian Department of Transport Inspector of Aircraft ☒ Other (*Specify*) Inspection Authorization

10-7-59 — (Date of approval or rejection)

Charles E. Straubel — (Signature of authorized individual; title or identification number)

7. TO BE COMPLETED ONLY BY CAA PERSONNEL

a. ☐ Forwarded for engineering comment ☐ See attached memorandum

b. ☒ Accepted 10-9-59 (Date) ☐ Reinspected _____ (Date) ☐ Spot Checked _____ (Date)

Reg. I NY
ASDO 9
(CAA designation number)

John J. Berg
(Signature Aviation Safety Agent)

10—54010-4

11-5-9

Form ACA-337 (4-52)

M C

FAA AIRCRAFT REGISTRY
CAMERA NO. 2N DATE: 7-16-82

INSTRUCTIONS

This form must be completed in duplicate each time a major repair and/or alteration is made of an aircraft, airframe, powerplant, propeller or appliance. After the repair and/or alteration has been inspected and item 6 completed, the original copy of this form will be made available to the aircraft owner for retention as part of the aircraft records. The duplicate copy is retained by the CAA for administrative purposes.

See CAM 18 for detailed instructions concerning the information to be furnished with this form and instructions concerning its preparation.

8. DESCRIPTION OF WORK ACCOMPLISHED.*

Rotating Beacon installed as per instructions called out in C.A.M. #18.

ITEM	WEIGHT	ARM	MOMENT
Aircraft	1680.3	78.3	131585.9
Rotating Beacon	1.5	155.0	232.5
	1681.8	78.3	131818.4

New Empty Weight C.G. 78.3

Refer to loading chart for weight distribution.

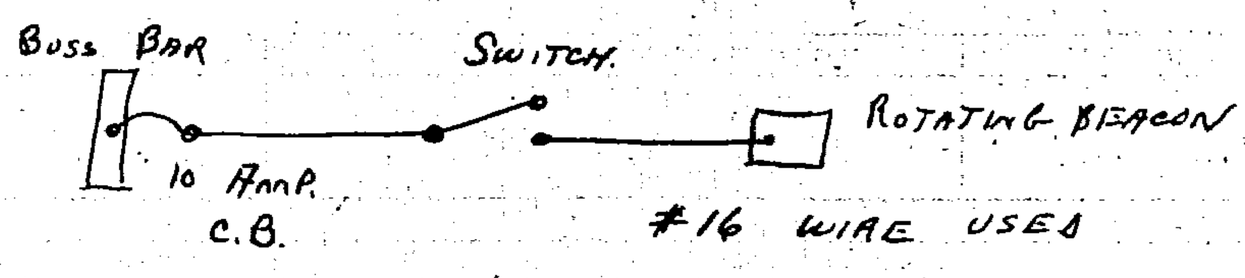

LOAD ANALYSIS PERFORMED ON ELECTRICAL SYSTEM AND FALLS WITHIN THE LIMITS AS PRESCRIBED IN MANUAL C.A.M #18.

*If additional space is needed attach additional sheets bearing aircraft nationality and registration mark and date work completed.

Check block if additional sheets are attached. ☐

U. S. GOVERNMENT PRINTING OFFICE 16—54010-4

FAA AIRCRAFT REGISTRY
CAMERA NO. 2N DATE: 7-16-82

N 240

U. S. DEPARTMENT OF COMMERCE
CIVIL AERONAUTICS ADMINISTRATION

APPLICATION FOR AIRWORTHINESS CERTIFICATE AND/OR ANNUAL INSPECTION OF AN AIRCRAFT

Form Approved. Budget Bureau No. 41-R041.5.

INSTRUCTIONS
Please print or type. Submit this form to the Civil Aeronautics Administration Aviation Safety Field Representative.

1. TYPE OF APPLICATION (*Check which*)

a. ☐ ORIGINAL ISSUANCE OF CERTIFICATE
b. ☒ ANNUAL INSPECTION FOR RENEWAL OF CERTIFICATE
c. ☐ AMENDMENT OR MODIFICATION OF CURRENT CERTIFICATE
d. ☑ RECERTIFICATION UNDER THE PROVISIONS OF CAR 8
e. ☐ MULTIPLE CERTIFICATE UNDER THE PROVISIONS OF CAR 8
f. ☐

2. AIRWORTHINESS CLASSIFICATION (*Check appropriate item(s)*)
It is requested that the Certificate of Airworthiness be issued to permit operation of the aircraft in the following airworthiness classification(s):

a. ☑ STANDARD (NORMAL, UTILITY, ACROBATIC, TRANSPORT CATEGORIES)
b. ☐ LIMITED (SEE CAR 9)
c. ☐ RESTRICTED (SEE CAR 8)
(*Check the restricted special purpose operation(s) to be conducted*)
☐ AGRICULTURAL AND PEST CONTROL
☐ AERIAL ADVERTISING
☐ AERIAL SURVEYING
☐ GLIDER TOWING
☐ PATROLLING
☐ FOREST AND WILDLIFE CONSERVATION
☐ WEATHER CONTROL
☐ OTHER

d. ☐ EXPERIMENTAL
(*Check the type of experimental operation(s) to be conducted*)
☐ RESEARCH AND DEVELOPMENT
☐ AMATEUR-BUILT
☐ DEMONSTRATION
☐ RACING
☐ EXHIBITION
☐ OTHER

3. AIRCRAFT IDENTIFICATION (*Complete all items*)

a. AIRCRAFT MAKE	b. AIRCRAFT MODEL	c. AIRCRAFT SERIAL NO.
Beechcraft	B35	D-2520

d. ENGINE MAKE	e. ENGINE MODEL
Continental	E-185-8

4. AIRCRAFT REGISTRATION INFORMATION (*Complete all items*)

a. REGISTERED OWNER'S FULL NAME	b. PERMANENT MAILING ADDRESS	c. AIRCRAFT NATIONALITY AND REGISTRATION MARK
Milton Poultry Company Inc.	Milton, Delaware	N- 8865A

5. AIRCRAFT OWNER'S CERTIFICATION (*Check and complete appropriate item*)

I hereby certify that I am the registered owner (or his agent) of the aircraft identified in Item 3 above which is registered* with the Civil Aeronautics Administration as required by the Regulations of the Administrator, Part 501 or 502 and when operated displays the following evidence of registration:

a. ☐ CERTIFICATE OF REGISTRATION, FORM ACA-500 (PART A), DATE OF ISSUE _____
b. ☒ APPLICATION FOR REGISTRATION, FORM ACA-500 (PART B), FORM ACA-500, PART A, FORWARDED TO CAA AIRCRAFT RECORDS BRANCH, W-300 ON 10/22/55 (DATE)
c. ☐ DEALER'S REGISTRATION CERTIFICATE, FORM ACA-1707, DATED _____

*In order to be eligible for registration an aircraft must be owned by a citizen of the United States, as defined by Section 1 (13) of the Civil Aeronautics Act of 1938, as amended.

ATTACHMENTS (*Check which*)

☐ ACA-319 ☐ WEIGHT AND BALANCE REPORT
☐ ACA-337 ☐ DATA, DRAWINGS, ETC.
☐ ACA-317 ☐ UNAPPROVED DEVIATION DATA

Milton Poultry Co. Earl Horton Pres
(SIGNATURE OF REGISTERED OWNER OR AUTHORIZED AGENT)
10/22/55 Agent
(DATE) (TITLE)

18—60837-2

Form ACA-305 (11-51)

FAA AIRCRAFT REGISTRY
CAMERA NO. 2N DATE: 7-16-82

U. S. DEPARTMENT OF COMMERCE
CIVIL AERONAUTICS ADMINISTRATION

AIRCRAFT INSPECTION REPORT

(To be completed by a CAA representative or approved repair station)

The aircraft described in Item 3 on the reverse of this form has been inspected and found to conform to the following:
(Check and complete applicable items)

1. AIRCRAFT AND ENGINE CERTIFICATION BASIS

a. [X] AIRCRAFT SPECIFICATION NO. 777 THROUGH SHEET REVISION NO. 33
b. [ ] AIRCRAFT LISTING PAGE NO. _____
c. [X] AIRWORTHINESS DIRECTIVE SUMMARY 1955 (YEAR) THROUGH CARD NO. 55-21
d. [ ] CIVIL AIR REGULATION PART 8 (MODIFIED TYPE CERTIFICATE)

2. AIRCRAFT AND ENGINE OPERATING RECORDS

a. [ ] AIRCRAFT NEW—NO PREVIOUS OPERATION OR MAINTENANCE HISTORY
b. [X] COMPLIANCE WITH APPLICABLE AIRWORTHINESS DIRECTIVES RECORDED
c. [X] AIRCRAFT RECORDS INDICATE THE AIRFRAME HAS BEEN OPERATED A TOTAL OF 429 HOURS
d. [X] ENGINE RECORDS INDICATE THE FOLLOWING OPERATION:

SERIAL NO. 20574D-0-8 TOTAL HOURS 429
SERIAL NO. _____ TOTAL HOURS _____
SERIAL NO. _____ TOTAL HOURS _____
SERIAL NO. _____ TOTAL HOURS _____

3. PREVIOUS INSPECTION RECORD (INSPECTION RECORDED ON FORM ACA-319)

a. LAST AIRWORTHINESS INSPECTION CONDUCTED 10/22/55 (DATE)
[ ] BY AIRCRAFT MANUFACTURER
[ ] BY APPROVED REPAIR STATION, CERTIFICATE NO. _____
[X] BY MECHANIC, CERTIFICATE NO. A&E 538404
b. [X] PERIODIC AIRCRAFT INSPECTION REPORT, FORM ACA-319, WAS RETURNED TO OWNER

RECEIVED
DEC 7 3 47 PM '55
[illegible]

4. AIRWORTHINESS DOCUMENTS ISSUED OR REVIEWED

a. [ ] OPERATION LIMITATIONS, FORM ACA-309, WAS ISSUED (COPY ATTACHED)
b. [ ] CURRENT OPERATION LIMITATIONS, FORM ACA-309, IS AVAILABLE IN AIRCRAFT
c. [X] CURRENT APPROVED AIRPLANE FLIGHT MANUAL IS AVAILABLE IN AIRCRAFT
d. [X] CURRENT WEIGHT AND BALANCE INFORMATION IS AVAILABLE IN AIRCRAFT
e. [X] THIS INSPECTION HAS BEEN RECORDED IN THE AIRCRAFT RECORDS
f. [X] CERTIFICATE OF AIRWORTHINESS, FORM ACA-1362, ISSUED TO EXPIRE 10/22/56 (DATE)
g. [X] PREVIOUS FORM ACA-1362 WAS ISSUED TO EXPIRE 10/8/55 (DATE)
BY Roger D. Miller (NAME OF ISSUING REPRESENTATIVE) NY 1500-13 (DESIGNATION NO.)

5. CAA APPROVED REPAIR STATION CERTIFICATION

The aircraft described on the reverse has been inspected under the authority accorded certificated repair station No. _____ by CAR 52 and was found to be:

[ ] AIRWORTHY
[ ] UNAIRWORTHY

(REPAIR STATION AUTHORIZED SIGNATURE) (DATE)

6. CAA REPRESENTATIVE CERTIFICATION

I HAVE INSPECTED THE AIRCRAFT DESCRIBED ON THE REVERSE AND FOUND IT [X] AIRWORTHY [ ] UNAIRWORTHY
(Check appropriate item)

DESIGNEE'S SIGNATURE	DESIGNATION NO.	DATE	
Alan M Cochran	1630	11/5/55	
AVIATION SAFETY AGENT'S SIGNATURE	CAA DESIGNATION NO.	DATE	[X] ACCEPTED
Henry G Smith	Reg. 1 NY ASDO 9	11/21/55	[ ] REINSPECTED
			[ ] SPOT CHECKED

[ ] ATTACHMENT

FAA AIRCRAFT REGISTRY
CAMERA NO. 2N DATE: 7-16-82

W-4140

U. S. DEPARTMENT OF COMMERCE
CIVIL AERONAUTICS ADMINISTRATION

Form approved.
Budget Bureau No. 41-R0524.

MAJOR REPAIR AND ALTERATION FORM (AIRFRAME, POWERPLANT, PROPELLER OR APPLIANCE)

1. AIRCRAFT	MAKE	MODEL	SERIAL NO.	NATIONALITY AND REGISTRATION MARK
	BEECHCRAFT	B-35	D-2520	N8865A (STD.)

2. OWNER	NAME (*First, middle, last*)	ADDRESS (*Street and number, city, zone and State*)
	MILTON POULTRY COMPANY, INC.	MILTON, DELAWARE

3. COMPLETE ONLY FOR UNIT REPAIRED AND/OR ALTERED. DESCRIBE WORK ACCOMPLISHED ON REVERSE IN ACCORDANCE WITH CIVIL AERONAUTICS MANUAL 18.

UNIT	MAKE	MODEL	SERIAL NO.	NATURE OF WORK (*Check*) MAJOR REPAIR	MAJOR ALTERATION
a. AIRFRAME	••••••••••••••••••••• (*As described in item 1 above*) •••••••••••••••••••••				X
b. POWERPLANT					
c. PROPELLER					
d. APPLIANCE	TYPE AND MANUFACTURER				

4. AIRCRAFT WEIGHT AND BALANCE DATA
**AFTER the repairs and/or alterations described below were made.*

This item must be completed by repair or alteration agency. However, in the case of a spare component, it will not be completed until such component is installed in an aircraft. At this time, it will be completed by the installing agency, if applicable.

CATEGORY	EMPTY WEIGHT (*Pounds*)*	EMPTY CENTER OF GRAVITY (*Inches from datum*)*	USEFUL LOAD (*Pounds*)*
UTILITY	1680.3	78.3	969.7

5. CONFORMITY STATEMENT (*Complete and check*)

a. AGENCY'S NAME AND ADDRESS	b. KIND OF AGENCY	c. CERTIFICATE NO.
Atlantic Aviation Service, Inc. P.O. Box 1709 Wilmington, Delaware	☐ U. S. Certificated Mechanic. ☐ Foreign Certificated Mechanic. ☒ Certificated Repair Station. ☐ Manufacturer. ☐ (Check if repair or alteration was made under delegation option procedures.)	3514

d. I certify that the repair and/or alteration made to the unit(s) identified under item 3 above and described on the reverse or attachments hereto have been made in accordance with the requirements of Part 18 of the U. S. Civil Air Regulations and that the information furnished herein is true and correct to the best of my knowledge.

6-23-55 (Date repair and/or alteration completed)

A. W. Hague (Signature of authorized individual)

6. APPROVAL FOR RETURN TO SERVICE (*Check and complete appropriate items*)
Pursuant to the authority specified below the unit identified in item 3 was inspected in the manner prescribed by the Administrator and is

☒ APPROVED ☐ REJECTED } BY { ☐ CAA Designee ☐ CAA Aviation Safety Agent ☐ Manufacturer ☒ Repair Station ☐ Canadian Department of Transport Inspector of Aircraft ☐ Other (*Specify*)

6-27-55 (Date of approval or rejection)

J. M. Passmore Station 3514 (Signature of authorized individual; title or identification number)

7. TO BE COMPLETED ONLY BY CAA PERSONNEL

a. ☐ Forwarded for engineering comment ☐ See attached memorandum

b. ☒ Accepted 7-14-55 (Date) ☐ Reinspected _____ (Date) ☐ Spot Checked _____ (Date)

Reg. 1 NY
ASDO 9
(CAA designation number)

B. S. Van Artsdalen (Signature Aviation Safety Agent)

16—54010-4

Form ACA-337 (4-52)

FAA AIRCRAFT REGISTRY
CAMERA NO. 2N DATE: 7-16-82

INSTRUCTIONS

This form must be completed in duplicate each time a major repair and/or alteration is made of an aircraft, airframe, powerplant, propeller or appliance. After the repair and/or alteration has been inspected and Item 6 completed, the original copy of this form will be made available to the aircraft owner for retention as part of the aircraft records. The duplicate copy is retained by the CAA for administrative purposes.

See CAM 18 for detailed instructions concerning the information to be furnished with this form and instructions concerning its preparation.

8. DESCRIPTION OF WORK ACCOMPLISHED.*

Installed Beech-supplied AIR CONDITIONER KIT in accordance with kit instructions.

	Wt#	Arm"	Moment
Aircraft Empty Weight	1664.3	77.6	129281.9
Air Conditioner Kit	16.0	144.0	2304.0
	1680.3	78.3	131585.9

New Empty Weight is 1680.3 and C.G. is 78.3 inches aft of datum.

REARWARD LOADING CONDITION

Aircraft Empty Weight	1680.3	78.3	131585.9
Oil 2½ gal.	18.75	36.0	675.0
Fuel 40 gal.	240.0	75.0	18000.0
Pilot & Passenger	340.0	85.0	28900.0
Passengers 2	340.0	116.0	39440.0
Baggage	30.0	139.0	4170.0
	2649.05	84.0	222770.9

Rearward C.G. is 84 inches aft of datum at gross weight
Aircraft rearward limit is 84.4 inches aft of datum

*If additional space is needed attach additional sheets bearing aircraft nationality and registration mark and date work completed.

Check block if additional sheets are attached. ☐

U. S. GOVERNMENT PRINTING OFFICE 16—54010-4

FAA AIRCRAFT REGISTRY
CAMERA NO. 2N DATE: 7/16-82

U. S. DEPARTMENT OF COMMERCE
CIVIL AERONAUTICS ADMINISTRATION

APPLICATION FOR AIRWORTHINESS CERTIFICATE AND/OR ANNUAL INSPECTION OF AN AIRCRAFT

Form Approved. Budget Bureau No. 41-R041.5.

INSTRUCTIONS
Please print or type. Submit this form to the Civil Aeronautics Administration Aviation Safety Field Representative.

1. TYPE OF APPLICATION (*Check which*)

a. ☐ ORIGINAL ISSUANCE OF CERTIFICATE
b. ☒ ANNUAL INSPECTION FOR RENEWAL OF CERTIFICATE
c. ☐ AMENDMENT OR MODIFICATION OF CURRENT CERTIFICATE
d. ☐ RECERTIFICATION UNDER THE PROVISIONS OF CAR 8
e. ☐ MULTIPLE CERTIFICATE UNDER THE PROVISIONS OF CAR 8
f. ☐

2. AIRWORTHINESS CLASSIFICATION (*Check appropriate item(s)*)

It is requested that the Certificate of Airworthiness be issued to permit operation of the aircraft in the following airworthiness classification(s):

a. ☒ STANDARD (NORMAL, UTILITY, ACROBATIC, TRANSPORT CATEGORIES)
b. ☐ LIMITED (SEE CAR 9)
c. ☐ RESTRICTED (SEE CAR 8)
(*Check the restricted special purpose operation(s) to be conducted*)
☐ AGRICULTURAL AND PEST CONTROL
☐ AERIAL ADVERTISING
☐ AERIAL SURVEYING
☐ GLIDER TOWING
☐ PATROLLING
☐ FOREST AND WILDLIFE CONSERVATION
☐ WEATHER CONTROL
☐ OTHER
d. ☐ EXPERIMENTAL
(*Check the type of experimental operation(s) to be conducted*)
☐ RESEARCH AND DEVELOPMENT
☐ AMATEUR-BUILT
☐ DEMONSTRATION
☐ RACING
☐ EXHIBITION
☐ OTHER

Acc
11-23-4

3. AIRCRAFT IDENTIFICATION (*Complete all items*)

a. AIRCRAFT MAKE	b. AIRCRAFT MODEL	c. AIRCRAFT SERIAL NO.
Beech	B-35	D 2520

d. ENGINE MAKE	e. ENGINE MODEL
Continental	E185-8

4. AIRCRAFT REGISTRATION INFORMATION (*Complete all items*)

a. REGISTERED OWNER'S FULL NAME	b. PERMANENT MAILING ADDRESS	c. AIRCRAFT NATIONALITY AND REGISTRATION MARK
W. W. Windle Company	Millbury, Mass.	N-8865A

5. AIRCRAFT OWNER'S CERTIFICATION (*Check and complete appropriate item*)

I hereby certify that I am the registered owner (or his agent) of the aircraft identified in Item 3 above which is registered* with the Civil Aeronautics Administration as required by the Regulations of the Administrator, Part 501 or 502 and when operated displays the following evidence of registration:

a. ☒ CERTIFICATE OF REGISTRATION, FORM ACA-500 (PART A). DATE OF ISSUE 1-10-51
b. ☐ APPLICATION FOR REGISTRATION, FORM ACA-500 (PART B). FORM ACA-500, PART A, FORWARDED TO CAA AIRCRAFT RECORDS BRANCH, W-300 ON _____ (DATE)
c. ☐ DEALER'S REGISTRATION CERTIFICATE, FORM ACA-1707, DATED _____

*In order to be eligible for registration an aircraft must be owned by a citizen of the United States, as defined by Section 1 (13) of the Civil Aeronautics Act of 1938, as amended.

ATTACHMENTS (*Check which*)
☐ ACA-319 ☐ WEIGHT AND BALANCE REPORT
☐ ACA-337 ☐ DATA, DRAWINGS, ETC.
☐ ACA-317 ☐ UNAPPROVED DEVIATION DATA

R J Moller
(SIGNATURE OF REGISTERED OWNER OR AUTHORIZED AGENT)

10-8-54 (DATE) Mechanic (TITLE)

16—60837-2

Form ACA-305 (11-51)

FAA AIRCRAFT REGISTRY
CAMERA NO. 2N DATE: 7-16-82

U. S. DEPARTMENT OF COMMERCE
CIVIL AERONAUTICS ADMINISTRATION

AIRCRAFT INSPECTION REPORT

(To be completed by a CAA representative or approved repair station)

The aircraft described in Item 3 on the reverse of this form has been inspected and found to conform to the following:
(Check and complete applicable items)

1. AIRCRAFT AND ENGINE CERTIFICATION BASIS
   - a. ☒ AIRCRAFT SPECIFICATION NO. A-777 THROUGH SHEET REVISION NO. 28
   - b. ☐ AIRCRAFT LISTING PAGE NO. _____
   - c. ☒ AIRWORTHINESS DIRECTIVE SUMMARY 1954 (YEAR) THROUGH CARD NO. 19
   - d. ☐ CIVIL AIR REGULATION PART 8 (MODIFIED TYPE CERTIFICATE)

2. AIRCRAFT AND ENGINE OPERATING RECORDS
   - a. ☐ AIRCRAFT NEW—NO PREVIOUS OPERATION OR MAINTENANCE HISTORY
   - b. ☒ COMPLIANCE WITH APPLICABLE AIRWORTHINESS DIRECTIVES RECORDED
   - c. ☒ AIRCRAFT RECORDS INDICATE THE AIRFRAME HAS BEEN OPERATED A TOTAL OF 305 HOURS
   - d. ☒ ENGINE RECORDS INDICATE THE FOLLOWING OPERATION:
     - SERIAL NO. 20574-D-0-8 TOTAL HOURS 305
     - SERIAL NO. _____ TOTAL HOURS _____
     - SERIAL NO. _____ TOTAL HOURS _____
     - SERIAL NO. _____ TOTAL HOURS _____

RECEIVED
NOV 8 10 20 AM '54
AUDIT & RECORDS BRANCH
W-300

3. PREVIOUS INSPECTION RECORD (INSPECTION RECORDED ON FORM ACA-319)
   - a. LAST AIRWORTHINESS INSPECTION CONDUCTED 10-8-54 (DATE)
     - ☐ BY AIRCRAFT MANUFACTURER
     - ☐ BY APPROVED REPAIR STATION, CERTIFICATE NO. _____
     - ☒ BY MECHANIC, CERTIFICATE NO. A & E 172461
   - b. ☒ PERIODIC AIRCRAFT INSPECTION REPORT, FORM ACA-319, WAS RETURNED TO OWNER

4. AIRWORTHINESS DOCUMENTS ISSUED OR REVIEWED
   - a. ☐ OPERATION LIMITATIONS, FORM ACA-309, WAS ISSUED (COPY ATTACHED)
   - b. ☐ CURRENT OPERATION LIMITATIONS, FORM ACA-309, IS AVAILABLE IN AIRCRAFT
   - c. ☒ CURRENT APPROVED AIRPLANE FLIGHT MANUAL IS AVAILABLE IN AIRCRAFT
   - d. ☒ CURRENT WEIGHT AND BALANCE INFORMATION IS AVAILABLE IN AIRCRAFT
   - e. ☒ THIS INSPECTION HAS BEEN RECORDED IN THE AIRCRAFT RECORDS
   - f. ☒ CERTIFICATE OF AIRWORTHINESS, FORM ACA-1362, ISSUED TO EXPIRE 10-8-55 (DATE)
   - g. ☒ PREVIOUS FORM ACA-1362 WAS ISSUED TO EXPIRE 11-5-54 (DATE)
     BY Roger L. Miller (NAME OF ISSUING REPRESENTATIVE) NY-1500-13 (DESIGNATION NO.)

5. CAA APPROVED REPAIR STATION CERTIFICATION

   The aircraft described on the reverse has been inspected under the authority accorded certificated repair station No. _____ by CAR 52 and was found to be:
   - ☐ AIRWORTHY
   - ☐ UNAIRWORTHY

   (REPAIR STATION AUTHORIZED SIGNATURE) _____ (DATE) _____

6. CAA REPRESENTATIVE CERTIFICATION

   I HAVE INSPECTED THE AIRCRAFT DESCRIBED ON THE REVERSE AND FOUND IT ☒ AIRWORTHY ☐ UNAIRWORTHY
   (Check appropriate item)

DESIGNEE'S SIGNATURE	DESIGNATION NO.	DATE	
Roger L. Miller	NY-1500-13	10-8-54	
AVIATION SAFETY AGENT'S SIGNATURE	CAA DESIGNATION NO.	DATE	☒ ACCEPTED
F. W. Falcone	NY-237-13	11/2/54	☐ REINSPECTED
			☐ SPOT CHECKED

☐ ATTACHMENT

FAA AIRCRAFT REGISTRY
CAMERA NO. 2N DATE: 7-16-82

U. S. DEPARTMENT OF COMMERCE
CIVIL AERONAUTICS ADMINISTRATION

APPLICATION FOR AIRWORTHINESS CERTIFICATE AND/OR ANNUAL INSPECTION OF AN AIRCRAFT

Form Approved. Budget Bureau No. 41-R041.5.

INSTRUCTIONS
Please print or type. Submit this form to the Civil Aeronautics Administration Aviation Safety Field Representative.

9-50

1. TYPE OF APPLICATION (*Check which*)

a. ☐ ORIGINAL ISSUANCE OF CERTIFICATE
b. ☒ ANNUAL INSPECTION FOR RENEWAL OF CERTIFICATE
c. ☐ AMENDMENT OR MODIFICATION OF CURRENT CERTIFICATE
d. ☐ RECERTIFICATION UNDER THE PROVISIONS OF CAR 8
e. ☐ MULTIPLE CERTIFICATE UNDER THE PROVISIONS OF CAR 8
f. ☐

2. AIRWORTHINESS CLASSIFICATION (*Check appropriate item(s)*)
It is requested that the Certificate of Airworthiness be issued to permit operation of the aircraft in the following airworthiness classification(s):

a. ☒ STANDARD (NORMAL, UTILITY, ACROBATIC, TRANSPORT CATEGORIES)
b. ☐ LIMITED (SEE CAR 9)
c. ☐ RESTRICTED (SEE CAR 8)
(*Check the restricted special purpose operation(s) to be conducted*)
☐ AGRICULTURAL AND PEST CONTROL
☐ AERIAL ADVERTISING
☐ AERIAL SURVEYING
☐ GLIDER TOWING
☐ PATROLLING
☐ FOREST AND WILDLIFE CONSERVATION
☐ WEATHER CONTROL
☐ OTHER
d. ☐ EXPERIMENTAL
(*Check the type of experimental operation(s) to be conducted*)
☐ RESEARCH AND DEVELOPMENT
☐ AMATEUR-BUILT
☐ DEMONSTRATION
☐ RACING
☐ EXHIBITION
☐ OTHER

3. AIRCRAFT IDENTIFICATION (*Complete all items*)

a. AIRCRAFT MAKE	b. AIRCRAFT MODEL	c. AIRCRAFT SERIAL NO.
Beech	B-35	D-2520

d. ENGINE MAKE	e. ENGINE MODEL
Continental	E-185-8

4. AIRCRAFT REGISTRATION INFORMATION (*Complete all items*)

a. REGISTERED OWNER'S FULL NAME	b. PERMANENT MAILING ADDRESS	c. AIRCRAFT NATIONALITY AND REGISTRATION MARK
W. W. Windle Company	Millbury, Mass.	N- 8865A

Rec 12-10-2

5. AIRCRAFT OWNER'S CERTIFICATION (*Check and complete appropriate item*)
I hereby certify that I am the registered owner (or his agent) of the aircraft identified in Item 3 above which is registered* with the Civil Aeronautics Administration as required by the Regulations of the Administrator, Part 501 or 502 and when operated displays the following evidence of registration:

a. ☒ CERTIFICATE OF REGISTRATION, FORM ACA-500 (PART A). DATE OF ISSUE 1/10/51
b. ☐ APPLICATION FOR REGISTRATION, FORM ACA-500 (PART B). FORM ACA-500, PART A, FORWARDED TO CAA AIRCRAFT RECORDS BRANCH, W-300 ON _____ (DATE)
c. ☐ DEALER'S REGISTRATION CERTIFICATE, FORM ACA-1707, DATED _____

*In order to be eligible for registration an aircraft must be owned by a citizen of the United States, as defined by Section 1 (13) of the Civil Aeronautics Act of 1938, as amended.

ATTACHMENTS (*Check which*)
☐ ACA-319 ☐ WEIGHT AND BALANCE REPORT
☐ ACA-337 ☐ DATA, DRAWINGS, ETC.
☐ ACA-317 ☐ UNAPPROVED DEVIATION DATA

D L Miller
(SIGNATURE OF ~~REGISTERED OWNER OR~~ AUTHORIZED AGENT)
11/3/53 (DATE)
Mechanic (TITLE)

Form ACA-305 (11-51)

16—60837-2

2

FAA AIRCRAFT REGISTRY
CAMERA NO. 2N DATE: 7-16-82

U. S. DEPARTMENT OF COMMERCE
CIVIL AERONAUTICS ADMINISTRATION

AIRCRAFT INSPECTION REPORT

(To be completed by a CAA representative or approved repair station)

The aircraft described in Item 3 on the reverse of this form has been inspected and found to conform to the following:
(Check and complete applicable items)

1. AIRCRAFT AND ENGINE CERTIFICATION BASIS

a. ☒ AIRCRAFT SPECIFICATION NO. A-777 THROUGH SHEET REVISION NO. 23
b. ☐ AIRCRAFT LISTING PAGE NO. _____
c. ☒ AIRWORTHINESS DIRECTIVE SUMMARY 1953 (YEAR) THROUGH CARD NO. 22
d. ☐ CIVIL AIR REGULATION PART 8 (MODIFIED TYPE CERTIFICATE)

2. AIRCRAFT AND ENGINE OPERATING RECORDS

a. ☐ AIRCRAFT NEW—NO PREVIOUS OPERATION OR MAINTENANCE HISTORY
b. ☒ COMPLIANCE WITH APPLICABLE AIRWORTHINESS DIRECTIVES RECORDED
c. ☒ AIRCRAFT RECORDS INDICATE THE AIRFRAME HAS BEEN OPERATED A TOTAL OF 200 HOURS
d. ☒ ENGINE RECORDS INDICATE THE FOLLOWING OPERATION:

SERIAL NO. 20574-D-0-8 TOTAL HOURS 200
SERIAL NO. _____ TOTAL HOURS _____
SERIAL NO. _____ TOTAL HOURS _____
SERIAL NO. _____ TOTAL HOURS _____

3. PREVIOUS INSPECTION RECORD (INSPECTION RECORDED ON FORM ACA-319)

a. LAST AIRWORTHINESS INSPECTION CONDUCTED November 4, 1953 (DATE)
☐ BY AIRCRAFT MANUFACTURER
☐ BY APPROVED REPAIR STATION, CERTIFICATE NO. _____
☒ BY MECHANIC, CERTIFICATE NO. 8244-40
b. ☒ PERIODIC AIRCRAFT INSPECTION REPORT, FORM ACA-319, WAS RETURNED TO OWNER

RECEIVED DEC 7 10 19 AM '53 ADMIN. & RECORDS BRANCH W-300

4. AIRWORTHINESS DOCUMENTS ISSUED OR REVIEWED

a. ☐ OPERATION LIMITATIONS, FORM ACA-309, WAS ISSUED (COPY ATTACHED)
b. ☐ CURRENT OPERATION LIMITATIONS, FORM ACA-309, IS AVAILABLE IN AIRCRAFT
c. ☒ CURRENT APPROVED AIRPLANE FLIGHT MANUAL IS AVAILABLE IN AIRCRAFT
d. ☒ CURRENT WEIGHT AND BALANCE INFORMATION IS AVAILABLE IN AIRCRAFT
e. ☒ THIS INSPECTION HAS BEEN RECORDED IN THE AIRCRAFT RECORDS
f. ☒ CERTIFICATE OF AIRWORTHINESS, FORM ACA-1362, ISSUED TO EXPIRE 11/5/54 (DATE)
g. ☒ PREVIOUS FORM ACA-1362 WAS ISSUED TO EXPIRE 10/3/53 (DATE)
BY Joseph Fitts (NAME OF ISSUING REPRESENTATIVE) 1321 (DESIGNATION NO.)

5. CAA APPROVED REPAIR STATION CERTIFICATION

The aircraft described on the reverse has been inspected under the authority accorded certificated repair station No. _____ by CAR 52 and was found to be:

☐ AIRWORTHY
☐ UNAIRWORTHY

(REPAIR STATION AUTHORIZED SIGNATURE) (DATE)

6. CAA REPRESENTATIVE CERTIFICATION

I HAVE INSPECTED THE AIRCRAFT DESCRIBED ON THE REVERSE AND FOUND IT ☒ AIRWORTHY ☐ UNAIRWORTHY
(Check appropriate item)

DESIGNEE'S SIGNATURE	DESIGNATION NO.	DATE	
Roger L. Miller	NY-1500-13	11/5/53	
AVIATION SAFETY AGENT'S SIGNATURE	CAA DESIGNATION NO.	DATE	☒ ACCEPTED
F. W. Falcone	NY-857-13	11/30/53	☐ REINSPECTED
			☐ SPOT CHECKED

☐ ATTACHMENT

FAA AIRCRAFT REGISTRY
CAMERA NO. 2N DATE: 7-16-82

U. S. DEPARTMENT OF COMMERCE
CIVIL AERONAUTICS ADMINISTRATION

APPLICATION FOR AIRWORTHINESS CERTIFICATE AND/OR ANNUAL INSPECTION OF AN AIRCRAFT

Form Approved. Budget Bureau No. 41-R041.5.

INSTRUCTIONS
Please print or type. Submit this form to the Civil Aeronautics Administration Aviation Safety Field Representative.

1. TYPE OF APPLICATION (*Check which*)

a. ☐ ORIGINAL ISSUANCE OF CERTIFICATE
b. ☒ ANNUAL INSPECTION FOR RENEWAL OF CERTIFICATE
c. ☐ AMENDMENT OR MODIFICATION OF CURRENT CERTIFICATE
d. ☐ RECERTIFICATION UNDER THE PROVISIONS OF CAR 8
e. ☐ MULTIPLE CERTIFICATE UNDER THE PROVISIONS OF CAR 8
f. ☐

2. AIRWORTHINESS CLASSIFICATION (*Check appropriate item(s)*)

It is requested that the Certificate of Airworthiness be issued to permit operation of the aircraft in the following airworthiness classification(s):

a. ☒ STANDARD (NORMAL, UTILITY, ACROBATIC, TRANSPORT CATEGORIES)
b. ☐ LIMITED (SEE CAR 9)
c. ☐ RESTRICTED (SEE CAR 8)
(*Check the restricted special purpose operation(s) to be conducted*)
☐ AGRICULTURAL AND PEST CONTROL
☐ AERIAL ADVERTISING
☐ AERIAL SURVEYING
☐ GLIDER TOWING
☐ PATROLLING
☐ FOREST AND WILDLIFE CONSERVATION
☐ WEATHER CONTROL
☐ OTHER
d. ☐ EXPERIMENTAL
(*Check the type of experimental operation(s) to be conducted*)
☐ RESEARCH AND DEVELOPMENT
☐ AMATEUR-BUILT
☐ DEMONSTRATION
☐ RACING
☐ EXHIBITION
☐ OTHER

9-50

3. AIRCRAFT IDENTIFICATION (*Complete all items*)

a. AIRCRAFT MAKE	b. AIRCRAFT MODEL	c. AIRCRAFT SERIAL NO.
Beechcraft	B-35	D-2520

d. ENGINE MAKE	e. ENGINE MODEL
Continental	E-185-8

OWN 10-30-2

4. AIRCRAFT REGISTRATION INFORMATION (*Complete all items*)

a. REGISTERED OWNER'S FULL NAME	b. PERMANENT MAILING ADDRESS	c. AIRCRAFT NATIONALITY AND REGISTRATION MARK
W. W. Windle Company	Tillbury, Massachusetts	N- 8865A

5. AIRCRAFT OWNER'S CERTIFICATION (*Check and complete appropriate item*)

I hereby certify that I am the registered owner (or his agent) of the aircraft identified in Item 3 above which is registered* with the Civil Aeronautics Administration as required by the Regulations of the Administrator, Part 501 or 502 and when operated displays the following evidence of registration:

a. ☒ CERTIFICATE OF REGISTRATION, FORM ACA-500 (PART A), DATE OF ISSUE Dec. 10, 1951
b. ☐ APPLICATION FOR REGISTRATION, FORM ACA-500 (PART B), FORM ACA-500, PART A, FORWARDED TO CAA AIRCRAFT RECORDS BRANCH, W-300 ON _____ (DATE)
c. ☐ DEALER'S REGISTRATION CERTIFICATE, FORM ACA-1707, DATED _____

*In order to be eligible for registration an aircraft must be owned by a citizen of the United States, as defined by Section 1 (18) of the Civil Aeronautics Act of 1938, as amended.

ATTACHMENTS (*Check which*)

☒ ACA-319
☐ ACA-337
☐ ACA-317
☐ WEIGHT AND BALANCE REPORT
☐ DATA, DRAWINGS, ETC.
☐ UNAPPROVED DEVIATION DATA

Francis A. Tollenson
(SIGNATURE OF REGISTERED OWNER OR AUTHORIZED AGENT)

10/3/52 (DATE) Agent (TITLE)

16—60837-2

Form ACA-305 (11-51)

FAA AIRCRAFT REGISTRY
CAMERA NO. 2N DATE: 7-16-82

U. S. DEPARTMENT OF COMMERCE
CIVIL AERONAUTICS ADMINISTRATION

AIRCRAFT INSPECTION REPORT

(To be completed by a CAA representative or approved repair station)

The aircraft described in Item 3 on the reverse of this form has been inspected and found to conform to the following:
(Check and complete applicable items)

1. AIRCRAFT AND ENGINE CERTIFICATION BASIS
   - a. [X] AIRCRAFT SPECIFICATION NO. A-777 THROUGH SHEET REVISION NO. 12
   - b. [ ] AIRCRAFT LISTING PAGE NO. _____
   - c. [X] AIRWORTHINESS DIRECTIVE SUMMARY 1952 (YEAR) THROUGH CARD NO. 52-22
   - d. [ ] CIVIL AIR REGULATION PART 8 (MODIFIED TYPE CERTIFICATE)

2. AIRCRAFT AND ENGINE OPERATING RECORDS
   - a. [ ] AIRCRAFT NEW—NO PREVIOUS OPERATION OR MAINTENANCE HISTORY
   - b. [X] COMPLIANCE WITH APPLICABLE AIRWORTHINESS DIRECTIVES RECORDED
   - c. [X] AIRCRAFT RECORDS INDICATE THE AIRFRAME HAS BEEN OPERATED A TOTAL OF 172.8 HOURS.
   - d. [X] ENGINE RECORDS INDICATE THE FOLLOWING OPERATION:
     - SERIAL NO. 20574-D-2-F TOTAL HOURS 172.8
     - SERIAL NO. _____ TOTAL HOURS _____
     - SERIAL NO. _____ TOTAL HOURS _____
     - SERIAL NO. _____ TOTAL HOURS _____

3. PREVIOUS INSPECTION RECORD (INSPECTION RECORDED ON FORM ACA-319)
   - a. LAST AIRWORTHINESS INSPECTION CONDUCTED 10-3-52 (DATE)
     - [ ] BY AIRCRAFT MANUFACTURER
     - [ ] BY APPROVED REPAIR STATION, CERTIFICATE NO. _____
     - [X] BY MECHANIC, CERTIFICATE NO. E 05131-41
   - b. [X] PERIODIC AIRCRAFT INSPECTION REPORT, FORM ACA-319, WAS RETURNED TO OWNER

4. AIRWORTHINESS DOCUMENTS ISSUED OR REVIEWED
   - a. [ ] OPERATION LIMITATIONS, FORM ACA-309, WAS ISSUED (COPY ATTACHED)
   - b. [ ] CURRENT OPERATION LIMITATIONS, FORM ACA-309, IS AVAILABLE IN AIRCRAFT
   - c. [X] CURRENT APPROVED AIRPLANE FLIGHT MANUAL IS AVAILABLE IN AIRCRAFT
   - d. [X] CURRENT WEIGHT AND BALANCE INFORMATION IS AVAILABLE IN AIRCRAFT
   - e. [X] THIS INSPECTION HAS BEEN RECORDED IN THE AIRCRAFT RECORDS
   - f. [X] CERTIFICATE OF AIRWORTHINESS, FORM ACA-1362, ISSUED TO EXPIRE 10/3/53 (DATE)
   - g. [X] PREVIOUS FORM ACA-1362 WAS ISSUED TO EXPIRE Sept 24, 1953 (DATE)
     BY Roger L. Miller (NAME OF ISSUING REPRESENTATIVE) 1-1500-15 (DESIGNATION NO.)

5. CAA APPROVED REPAIR STATION CERTIFICATION

   The aircraft described on the reverse has been inspected under the authority accorded certificated repair station No. _____ by CAR 52 and was found to be:
   - [ ] AIRWORTHY
   - [ ] UNAIRWORTHY

   (REPAIR STATION AUTHORIZED SIGNATURE) _____ (DATE) _____

6. CAA REPRESENTATIVE CERTIFICATION

   I HAVE INSPECTED THE AIRCRAFT DESCRIBED ON THE REVERSE AND FOUND IT [X] AIRWORTHY [ ] UNAIRWORTHY
   (Check appropriate item)

DESIGNEE'S SIGNATURE	DESIGNATION NO.	DATE	
Joseph Fitt	1321	10/3/52	
AVIATION SAFETY AGENT'S SIGNATURE	CAA DESIGNATION NO.	DATE	[X] ACCEPTED
[illegible]	1-579M-13	10-9-52	[ ] REINSPECTED
			[ ] SPOT CHECKED

[ ] ATTACHMENT

The last know date of inspection was 1/17/52

FAA AIRCRAFT REGISTRY
CAMERA NO. 2N-DATE: 7-16-82

Form ACA-805
(11-49)

DEPARTMENT OF COMMERCE
CIVIL AERONAUTICS ADMINISTRATION

Form Approved
Budget Bureau No. 41-R041.4

APPLICATION FOR AIRWORTHINESS CERTIFICATE AND/OR ANNUAL INSPECTION OF AN AIRCRAFT

INSTRUCTIONS
Please submit this form to the Civil Aeronautics Administration Aviation Safety Field Representative

1. APPLICATION (CHECK WHETHER)
- ☐ ORIGINAL AIRWORTHINESS CERTIFICATE
- ☒ ANNUAL INSPECTION

2. AIRWORTHINESS CLASSIFICATION
- ☒ STANDARD
- ☐ RESTRICTED
- ☐ EXPERIMENTAL
- ☐ LIMITED
- ☐ OTHER _____

AIRCRAFT

3. MAKE: Beech
4. MODEL: B-35
5. NATIONALITY AND REGISTRATION MARK: [redacted] N8865A
6. MANUFACTURER'S SERIAL NO.: [redacted] D-2520

ENGINE

7. MAKE: Continental
8. MODEL: E185-8

9. OWNER'S NAME: W. W. Windle Company

10. (GIVE ADDRESS ONLY IF IT HAS BEEN CHANGED FROM THAT GIVEN ON YOUR CERTIFICATE OF REGISTRATION, FORM ACA-500): Millbury, Massachusetts

11. ATTACHMENTS (CHECK WHICH)
- ☐ ACA-319
- ☐ WEIGHT AND BALANCE REPORT
- ☐ ACA-337
- ☐ DATA, DRAWINGS, ETC.
- ☐ ACA-317
- ☐ UNAPPROVED DEVIATION DATA

12. I CERTIFY that the above statements are true.

R. Swenson (OWNER OR AUTHORIZED AGENT)

9-21-51 (DATE) Pilot (TITLE)

Form ACA-805a
(11-49)

AIRCRAFT INSPECTION REPORT
(To be completed by CAA representatives)

13. It has been determined that the aircraft described in 305 above is in conformity with the following:
(CHECK AND COMPLETE APPLICABLE ITEMS)

a. ☒ AIRCRAFT SPECIFICATION NO. A-777 THROUGH SHEET REVISION NO. 15
b. ☐ AIRCRAFT LISTING PAGE NO. _____
c. ☒ AIRWORTHINESS DIRECTIVE SUMMARY 1951 (YEAR) THROUGH CARD NO. 22
d. ☐ OPERATIONS LIMITATIONS FORM ACA-309 ISSUED.
e. ☐ OPERATIONS LIMITATIONS FORM ACA-309 IS AVAILABLE IN AIRCRAFT.
f. ☒ CURRENT, APPROVED, AIRPLANE FLIGHT MANUAL IS AVAILABLE IN AIRCRAFT.
g. ☒ ALL APPLICABLE NOTES, INSTRUMENT MARKINGS, AND PLACARDS HAVE BEEN COMPLIED WITH.
h. ☒ CERTIFICATE OF AIRWORTHINESS FORM ACA-1352 WAS ISSUED.

FINDINGS

14.
- ☒ AIRWORTHY
- ☐ UNAIRWORTHY

15. DESIGNEE'S SIGNATURE: Roger L. Miller
16. DESIGNATION NO.: 1500
17. DATE: 9-25-51
18. AVIATION SAFETY AGENT'S SIGNATURE: F. W. Takemer
19.
- ☒ ACCEPTED
- ☐ REINSPECTED

20. DATE: 10/5/51

21. REASON FOR DISAPPROVAL, OR REMARKS (INDICATE IF YOU HAVE USED THE REVERSE TO CONTINUE THIS OR OTHER ITEM) ☐ YES ☐ NO

Date of last flight - 9-21-51.

12-20-1 NW

FAA AIRCRAFT REGISTRY
CAMERA NO. 2N DATE: 7-16-82

Form ACA-305 (12-47)

DEPARTMENT OF COMMERCE
CIVIL AERONAUTICS ADMINISTRATION

FORM APPROVED
BUDGET BUREAU NO. 41-R041.3

APPLICATION FOR AIRWORTHINESS CERTIFICATE AND/OR ANNUAL INSPECTION OF AN AIRCRAFT

INSTRUCTIONS
Please submit this form to the Civil Aeronautics Administration Field Representative

APPLICATION (Check whether)
- [x] ORIGINAL AIRWORTHINESS CERTIFICATE
- [ ] ANNUAL INSPECTION

AIRWORTHINESS CLASSIFICATION
- [x] STANDARD
- [ ] RESTRICTED
- [ ] EXPERIMENTAL
- [ ] LIMITED
- [ ] OTHER

AIRCRAFT

MAKE	MODEL	TYPE CERTIFICATE NO.
BEECHCRAFT	B-35	777

REGISTRATION NO.	MANUFACTURER'S SERIAL NO.
8865A	D-2520

ENGINE

MAKE	MODEL
Continental	E-185-8

mfg - 9-50

OWNER'S NAME: BEECH AIRCRAFT CORPORATION

PERMANENT ADDRESS (Street and number, city, zone, and State): Wichita 1, Kansas

ATTACHMENTS (Check which)
- [ ] ACA-319
- [ ] WEIGHT AND BALANCE REPORT
- [ ] ACA-337
- [ ] DATA, DRAWINGS, ETC.
- [ ] ACA-317
- [ ] UNAPPROVED DEVIATION DATA

I CERTIFY that the above statements are true.

L. Winters
Owner or authorized agent.

9-12-50 (DATE) Assistant Secretary (TITLE)

Form ACA-305a

AIRCRAFT INSPECTION REPORT

(To be completed by a CAA inspector or a designated inspector or representative)

It has been determined that the aircraft described in 305 above is in conformity with the following:

ALL APPLICABLE MANDATORY NOTES, INSTRUMENT MARKINGS AND PLACARDING REQUIREMENTS HAVE BEEN COMPLIED WITH [x] YES [ ] NO

AIRCRAFT SPECIFICATION—AIRWORTHINESS DIRECTIVE NO(S). A-777-9 AD'S 1950 thru 50-36 (Specify)

FORM ACA-1362, CERTIFICATE OF AIRWORTHINESS, ISSUED [x] ORIGINAL [ ] ANNUAL INSPECTION

(Check whether)
- [ ] OPERATION LIMITATIONS FORM ACA-309 WAS ISSUED, OR
- [x] APPROVED AIRPLANE FLIGHT MANUAL IS IN THE AIRCRAFT

FINDINGS

- [x] AIRWORTHY
- [ ] UNAIRWORTHY

DESIGNEE'S SIGNATURE AND NO. C. F. Grace #5002 — DATE September 12, 1950

CAA INSPECTOR'S SIGNATURE — [ ] ACCEPTED [ ] REINSPECTED — DATE

REASON FOR DISAPPROVAL, OR REMARKS (Indicate if you have used the reverse to continue this or other item.) [ ] Yes [x] No

acc 8-7-1 NWX

acc 3-15-51 NWX

acc 10-13-0

FAA AIRCRAFT REGISTRY
CAMERA NO. 2N DATE: 7-16-82

FAA AIRCRAFT REGISTRY
CAMERA NO. 2N DATE: 7-16-82

Form ACA-337 (11-48)

DEPARTMENT OF COMMERCE
CIVIL AERONAUTICS ADMINISTRATION

Form Approved. Budget Bureau No. 41-R052.2.

REPAIR AND ALTERATION FORM (AIRCRAFT, PROPELLERS, ENGINES, INSTRUMENTS)

(SEE REVERSE SIDE OF THIS FORM FOR INSTRUCTIONS) (STANDARD)

1. AIRCRAFT	MAKE: Beechcraft	MODEL: B-35	SERIAL NO.: D2520	NATIONALITY AND REGISTRATION MARK: N 8865A
2. OWNER	NAME (*First, middle, last*): ~~Universal Aviation Corp.~~ W. W. Windle Company	ADDRESS (*Street and number, city, zone, and State*): ~~Worcester, Mass.~~ Millbury, Massachusetts		

3. FILL IN INFORMATION IN THIS ITEM ONLY FOR THE UNIT REPAIRED AND/OR ALTERED

UNIT	MAKE	MODEL	SERIAL NO.	NATURE OF WORK (*Check*): MAJOR REPAIR	MAJOR ALTERATION
a. AIRCRAFT	********** (*As described in item 1 above*) **********				
b. PROPELLER BLADE OR HUB					
c. ENGINE					
d. INSTRUMENT	TYPE AND MANUFACTURER: Turn & Bank Schwein (American)	S 27200-18	50-681	X	

4. AIRCRAFT WEIGHT AND BALANCE DATA

This item must be completed by repair or alteration agency. However, in the case of a spare component, it will not be completed until such component is installed in an aircraft. At this time, it will be completed by the installing agency, if applicable.

**AFTER the repairs and/or alterations described below were made.*	EMPTY WEIGHT (*Pounds*)*	EMPTY CENTER OF GRAVITY (*Inches from datum*)*	USEFUL LOAD (*Pounds*)*
	1664.3	77.6 in aft of datum	985.7

5. KIND OF AGENCY WHICH MADE REPAIRS AND/OR ALTERATIONS (*Check*)

☐ MANUFACTURER ☒ APPROVED REPAIR STATION NO. 3500 (*Specify*) ☐ CERTIFIED MECHANIC

6. AGENCY	NAME	ADDRESS (*Street and number, city, zone, and State*)	DATE WORK ACCOMPLISHED
	SMS INSTRUMENT SALES & SERVICE INC	NY INTERNATIONAL AIRPORT, JAMAICA	4/13/51

DESCRIPTION OF WORK (ALL WORK MUST BE ACCOMPLISHED IN ACCORDANCE WITH PART 18 OF THE CIVIL AIR REGULATIONS AND ITS ASSOCIATED CIVIL AERONAUTICS MANUAL 18.)

OVERHAULED & TESTED IN ACCORDANCE WITH MANUFACTURERS SPECIFICATIONS.

Removed Turn and Bank, Serial #50-681, and forwarded it to S.M.S. Instrument Sales and Service for overhaul. Upon return of same, installed it in airplane.

This instrument was installed and removed by a Certified Mechanic. 4/18/51

Paul Bergevin A & E 445924
Paul W Bergevin

If more space is needed, continue on reverse, or attach separate sheets bearing aircraft registration mark.

☐ FORWARDED FOR ENGINEERING APPROVAL

I CERTIFY that the above statements are true and correct to the best of my knowledge.

Samuel Stein — (Signature of supervising mechanic) 655025 A & E — (Certificate number and rating) 4/13/51 — (Date)

TO BE COMPLETED BY CAA REPRESENTATIVES

☒ APPROVED	DESIGNEE'S SIGNATURE: Joseph T. Fitts	NO.: 1321	DATE: 4/24/51
☐ REJECTED	CAA AGENT SIGNATURE: [illegible]	☒ ACCEPTED ☐ REINSPECTED	DATE: 5-2-51

10—54010-2

FAA AIRCRAFT REGISTRY
CAMERA NO. 2N DATE: 7-16-82

INSTRUCTIONS

1. This form must be filled out in duplicate each time a major repair and/or alteration is made of an aircraft, propeller, engine, or instrument.
2. When repairs and/or alterations are made which affect the operation limitations set forth in the Airplane Flight Manual or Form ACA-309, the aircraft shall not be returned to service until the operation limitations have been corrected by an authorized representative of the CAA.
3. Certificated mechanics must, in all cases, obtain approval of the repair and/or alteration from the CAA representative prior to returning the article to service.
4. The manufacturer of an aircraft, engine, propeller, or instrument, and a certificated repair station holding the appropriate rating may return the article to service without prior approval of an authorized CAA representative, provided the alteration and/or repair does not change any of the operation limitations.
5. Repair agencies will be guided as follows when completing this form.
   a. **For an Aircraft Repair and/or Alteration**—Complete Items 1, 2, 3*a*, 4, 5, 6, and 7.
   Mechanic—Submit to CAA representative for inspection and approval prior to returning the article to service. Upon approval, the CAA representative will return the original copy to the mechanic who should submit it to the aircraft owner.
   Manufacturer or Approved Repair Station—Submit original to aircraft owner, forward copy to CAA district office or CAA agent prior to returning article to service.
   b. **For a Component Installed in an Aircraft**—Complete Items 1, 2, 3 (*b*, *c*, or *d*, whichever is applicable), 4, 5, 6, and 7. Distribute copies as in *a* above.
   c. **For a Spare Component**—Complete Items 3 (*b*, *c*, or *d*, whichever is applicable), 5, 6, and 7.
   Mechanic—Submit to CAA representative for inspection and approval. When approved, retain both copies of the form with the component until installation on an aircraft. At this time Items 1, 2, and 4 must be completed by the installing agency who will distribute the forms as follows: (No further approval of CAA is required, only a log-book entry by the installing agency is necessary.) After installation, original form should be submitted to aircraft owner, and copy forwarded to the nearest CAA district office or CAA agent.
   Manufacturer or Approved Repair Station—Handle same as for mechanics except that it is not necessary to submit to CAA representative for inspection or approval.

16—54010-2 U. S. GOVERNMENT PRINTING OFFICE

FAA AIRCRAFT REGISTRY
CAMERA NO. 2N DATE: 7-16-82

Form ACA-337
(11-7-46)

DEPARTMENT OF COMMERCE
CIVIL AERONAUTICS ADMINISTRATION

Budget Bureau No. 41-R052.1.
Approval expires December 31, 1948.

REPAIR AND ALTERATION FORM (AIRCRAFT, PROPELLERS, ENGINES, INSTRUMENTS)

INSTRUCTIONS.—This form must be filled out in duplicate each time a major repair and/or alteration is made of an aircraft, propeller, engine, or instrument, as follows:

(A) *For an Aircraft.*—Complete items 1, 2, 3a, 4, 5, 6, and 7, and submit to CAA representative for approval.

(B) *For a Component Installed in an Aircraft.*—Complete items 1, 2, 3 (b, c, or d, whichever is applicable), 4, 5, and 6, and submit as described in (A) above.

(C) *For a Spare Component.*—Complete items 3 (b, c, or d), 5, and 6, and submit to CAA representative for approval. When approved, retain both copies of this form with the component until installation on an aircraft. At that time items 1, 2, and 4 must be completed by the installing agency which will then forward forms as described in (A) above.

1. AIRCRAFT	MAKE Beechcraft	MODEL B35	SERIAL NO. D-2520	CAA IDENTIFICATION MARK N8865A (std)
2. OWNER	NAME (*First, middle, last*) W.W. Windle Co.	ADDRESS (*Street and number, city, zone, and State*) Millbury, Mass.		

3. FILL IN INFORMATION IN THIS ITEM ONLY FOR THE UNIT REPAIRED AND/OR ALTERED

UNIT	MAKE	MODEL	SERIAL NO.	NATURE OF WORK (*Check*) MAJOR REPAIR	MAJOR ALTERATION
a. AIRCRAFT	(*As described in item 1 above*)				X
b. PROPELLER BLADE OR HUB					
c. ENGINE					
d. INSTRUMENT	TYPE AND MANUFACTURER				

The following items are to be completed by repair or alteration agency. However, in the case of a spare component, item 4 will not be completed until such component is installed in an aircraft. At this time, item 4 will be completed by the installing agency, if applicable.

4. AIRCRAFT	EMPTY WEIGHT (*Pounds*)* 1664.3 (comp)	EMPTY CENTER OF GRAVITY (*Inches from datum*)* 77.6 in aft of datum	USEFUL LOAD (*Pounds*)* norm. 985.7

* After the repairs and/or alterations described below were made.

5. KIND OF AGENCY WHICH MADE REPAIRS AND/OR ALTERATIONS (*Check*)

☐ MANUFACTURER ☐ APPROVED REPAIR STATION NO. _____ (Specify) ☒ CERTIFIED MECHANIC

6. AGENCY	NAME Usher Aviation Radio Div.	ADDRESS (*Street and number, city, zone, and State*) Municipal Airport New Haven? Conn.	DATE WORK ACCOMPLISHED Jan. 12,1951

7. DESCRIPTION OF WORK ACCOMPLISHED IN ACCORDANCE WITH PART 18 OF THE CIVIL AIR REGULATIONS AND ITS ASSOCIATED CIVIL AERONAUTICS MANUAL 18. (IF MORE SPACE IS NEEDED, CONTINUE ON REVERSE OR ATTACH SEPARATE SHEETS BEARING AIRCRAFT IDENTIFICATION MARK.)

Installed Lear ADF-12 according to Lear installation instructions for Beech Bonnanza dwg. no's 64152,-- 64139 and 64153

See reverse side for weight and balance.

I CERTIFY that the above statements are true and correct to the best of my knowledge.

Thomas W. Ennis (Signature of supervising mechanic)	A&E177539 (Certificate number and rating)	Jan. 12,1951 (Date)

TO BE COMPLETED BY CAA REPRESENTATIVES

☒ APPROVED ☐ REJECTED ☐ FORWARDED FOR ENGINEERING APPROVAL	SIGNATURE OF DESIGNEE T.W. Ennis	NO. 1644	DATE Jan.18,1951
	SIGNATURE OF INSPECTOR	☒ ACCEPTED ☐ REINSPECTED	DATE 1-25-51

U. S. GOVERNMENT PRINTING OFFICE 16—84010-1

Item	Weight	Arm	Moment
E.W.A.	1646.1	77.37	127362.4
Tuner	3.8	64.1	243.6
Amplifier	8.4	75.1	630.8
Indicator	.8	67.1	53.7
Loop	2.2	276.1	607.4
Cables etc.	3.0	128.0	384.0
	1664.3	77.6	129281.9

New B.C.G. ≠77.6
New Empty weight 1664.3

FWD. CHECK

Item	Weight	Arm	Moment
E.W.A.	1664.3	77.6	129281.9
Pilot	170.0	85.0	14450.0
Fuel (39)	234.0	75.0	17550.0
Oil (2½)	19.0	35.0	665.0
	2087.3	77.5	161946.9

REARWARD CHECK

Item	Arm	Weight	Moment	#2 Weight	#2 Moment
E.W.A.	77.6	1664.3	129281.9	1664.3	129281.9
Pilot	85.0	170.0	14450.0	170.0	14450.0
coPilot	85.0	170.0	14450.0	170.0	14450.0
Rear Seat	116.0	340.0	39440.0	240.0	27840.0
Fuel	75.0	90.0	6750.0	90.0	6750.0
Oil	35.0	19.0	665.0	19.0	665.0
Aux. tank	152.0	------	-------	117.0	15444.0
Baggage	145.0	53.0	7685.0	------	-------
		2506.3	212721.9	2470.3	208880.0

#1 rear check C.G. ≠84.8
#2 rear check C.G. ≠84.5

The above C.G.'s are within limits of graph in spec. A-777

FAA AIRCRAFT REGISTRY
CAMERA NO. 2N DATE: 7-16-82

Form ACA-337
(11-7-46)

DEPARTMENT OF COMMERCE
CIVIL AERONAUTICS ADMINISTRATION

Budget Bureau No. 41-R052.1.
Approval expires December 31, 1948.

REPAIR AND ALTERATION FORM (AIRCRAFT, PROPELLERS, ENGINES, INSTRUMENTS)

INSTRUCTIONS.—This form must be filled out in duplicate each time a major repair and/or alteration is made of an aircraft, propeller, engine, or instrument, as follows:

(A) ***For an Aircraft.***—Complete items 1, 2, 3a, 4, 5, 6, and 7, and submit to CAA representative for approval.

(B) ***For a Component Installed in an Aircraft.***—Complete items 1, 2, 3 (b, c, or d, whichever is applicable), 4, 5, and 6, and submit as described in (A) above.

(C) ***For a Spare Component.***—Complete items 3 (b, c, or d), 5, and 6, and submit to CAA representative for approval. When approved, retain both copies of this form with the component until installation on an aircraft. At that time items 1, 2, and 4 must be completed by the installing agency which will then forward forms as described in (A) above.

(STANDARD)

	MAKE	MODEL	SERIAL NO.	CAA IDENTIFICATION MARK
1. AIRCRAFT	Beechcraft	B-35	D-2520	N 8865A

	NAME (*First, middle, last*)	ADDRESS (*Street and number, city, zone, and State*)
2. OWNER	W. W. Windle Company	Millbury, Massachusetts

3. FILL IN INFORMATION IN THIS ITEM ONLY FOR THE UNIT REPAIRED AND/OR ALTERED

UNIT	MAKE	MODEL	SERIAL NO.	NATURE OF WORK (*Check*) MAJOR REPAIR	MAJOR ALTERATION
a. AIRCRAFT	(*As described in item 1 above*)				X
b. PROPELLER BLADE OR HUB					
c. ENGINE					
d. INSTRUMENT	TYPE AND MANUFACTURER				

The following items are to be completed by repair or alteration agency. However, in the case of a spare component, item 4 will not be completed until such component is installed in an aircraft. At this time, item 4 will be completed by the installing agency, if applicable.

	EMPTY WEIGHT (*Pounds*)*	EMPTY CENTER OF GRAVITY (*Inches from datum*)*	USEFUL LOAD (*Pounds*)*
4. AIRCRAFT	1646.1	+77.37	1003.9

* After the repairs and/or alterations described below were made.

5. KIND OF AGENCY WHICH MADE REPAIRS AND/OR ALTERATIONS (*Check*)

☐ MANUFACTURER ☐ APPROVED REPAIR STATION NO. _____ (Specify) ☐ CERTIFIED MECHANIC

	NAME	ADDRESS (*Street and number, city, zone, and State*)	DATE WORK ACCOMPLISHED
6. AGENCY	Joseph T. Fitts	Universal Aviation Corporation Worcester, Massachusetts	1/6/51

7. DESCRIPTION OF WORK ACCOMPLISHED IN ACCORDANCE WITH PART 18 OF THE CIVIL AIR REGULATIONS AND ITS ASSOCIATED CIVIL AERONAUTICS MANUAL 18. (IF MORE SPACE IS NEEDED, CONTINUE ON REVERSE OR ATTACH SEPARATE SHEETS BEARING AIRCRAFT IDENTIFICATION MARK.)

Installed Beech approved Kit #35-505A in this airplane. Kit consists of the following: 1 Vacuum pump (Presco) 4.0 lbs at +37. 1 oil seperator .5 lbs at +37. 1 suction regulator .3 lbs at +52. 1 attitude gyro 3.0 lbs at +66. 1 directional gyro 4.0 lbs at +66. 1 section guage .3 lbs at +67. Hose tubes etc 1.0 lbs at +45. Installed winterization kit #35-910277 Item 110a of spec 777 1.0 lb at +10 net wt increase is 14.1 lbs

I CERTIFY that the above statements are true and correct to the best of my knowledge.

Joseph Fitts	A&E 291207	1/6/51
(Signature of supervising mechanic)	(Certificate number and rating)	(Date)

TO BE COMPLETED BY CAA REPRESENTATIVES

☑ APPROVED ☐ REJECTED ☐ FORWARDED FOR ENGINEERING APPROVAL	SIGNATURE OF DESIGNEE J. J. Doyle	NO. 1209	DATE 1/13/51
	SIGNATURE OF INSPECTOR	☑ ACCEPTED ☐ REINSPECTED	DATE 1-23-51

U. S. GOVERNMENT PRINTING OFFICE 16—54010-1

FAA AIRCRAFT REGISTRY
CAMERA NO. 2N DATE: 7-16-82

	Weight	Arm	Moment
Airplane E. W.	1632.0	+77.6	+126643.2
Oil Seperator	.5	+37.0	+18.5
Vacuum Pump	4.0	+37.0	+148.0
Suction Regulator	.3	+52.0	+15.6
Attitude Gyro	3.0	+66.0	+198.0
Directional Gyro	4.0	+66.0	+264.0
Suction Guage	.3	+67.0	+20.1
Hose Tubes etc	1.0	+45.0	+45.0
Winterization Kit	1.0	+10.0	+10.0
	+1646.1		+127362.4

$$\frac{+127362.4}{+1646.1} = +77.37 \text{ New E. C.G.}$$

C.G. range is straight line variation between 75.9 to 85.4 at 2140 lbs or less. Since this is within these limits and but .2 difference, no further computations are necessary.